SYMBOL DEFINITION			MISSING SYMBOLS
A DIMENSION WITHOUT AN INSPECTION REPORT SYMBOL (□) DOES NOT REQUIRE INSPECTION. IT MAY BE CONTROLLED ON THE INDIVIDUAL COMPONENT DRAWING.	TOTAL NO OF INSPECTIONS REQUIRED	19	NO MISSING SYMBOL NUMBER
	LAST NO. USED	19	

DWG STATUS DATE	STG	REV	N/P	CHG	ZONE	REVISION HISTORY	AUTH	DR	AP/D1	AP/D2
26NOV96	-	-	-	-		ALL PARTS-PID CREATED FROM SEPARATE PID'S NO REV UPDATED REQ'D 15317765 RELEASED TO REV "A"	960005	WTP	WTP	WTP
26NOV96	-	-	-	-		ALL ACTIVE PARTS-REVISED-REV LEVELS ADVANCED	176842	WTP	WTP	WTP
13JAN96	-	-	-	-		12047581-12059894-12191889 & 15317765 REVISED-REV LEVELS ADVANCED	176913	EMB	EMB	AUB
11MAR97	-	-	-	-		15317765 REVISED-REV LEVEL ADVANCED	178061	MVA	MVA	MVA
08MAY97	-	-	-	-		ALL ACTIVE PARTS-REVISED-NO REV UPDATE REQ'D	177551	PHC	PHC	JVS
08MAY97	-	-	-	-		15355307-RELEASED TO REV "A"	970005	PHC	PHC	JVS
15JUL97	-	-	-	-		12191889-PID UPDATED- NO REV UPDATE REQ'D	181156	EMB	EMB	RPO
18JAN05	R	01	-	-		REVISED MATERIAL SPEC	262972	MM	MM	BB
30MAR05	R	02	-	-		ALL ACTIVE PARTS - TOLERANCE ON DIM #4 WAS ±0.1	265258	LMB	LMB	MM
19MAY05	R	03	-	-		ALL ACTIVE PARTS - UPDATED PDM ATTRIBUTES	268260	GPS	JVM	BDG
16AUG05	R	04	-	-		ALL ACTIVE PARTS - ADDED STAMP I.D. LABEL	270616	RTV	FRG	MKM
22NOV05	R	05	-	-		12191889 - RESTRICTED AND ADDED PROCESS NOTE # 2, 15355307 - RESTRICTED AND CABLE SIZE WAS 0.35-0.5	274640	MDH	JVM	BDG
15JAN09	R	06	-	-		ALL ACTIVE PARTS - ADDED LABEL AND DIM 2.5 +0.1/-0.15 WAS 2.5 ±0.1	407112	SCR	ECB	GEM
08APR09	R	07	-	-		12040993 - OBSOLETE & REPLACED BY 12047581	407299	JTZ	FKV	RAP
10JAN11	R	08	-	-		ALL ACTIVE PARTS- UPDATED PDM ATTRIBUTES	413005	LHT	LHT	LHT
05FEB13	R	09	-	-		ALL ACTIVE PARTS- UPDATED PDM ATTRIBUTES	421357	JRV	FRE	JRV

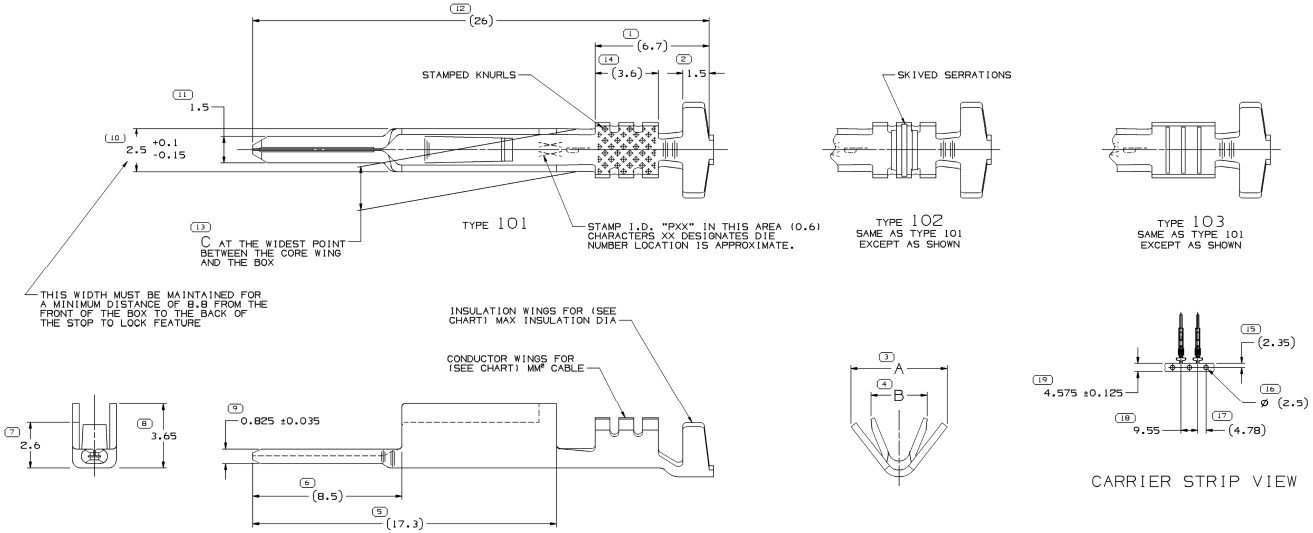

NOTES

1. UNLESS OTHERWISE SPECIFIED AND/OR INDICATED:

   DIMENSIONS ARE TO FACE OF VIEW SHOWN AND AUTOMATICALLY ROUNDED BY COMPUTER FOR INSPECTION (SEE MATH MODEL FOR PRECISE DIMENSIONS). FOR ALL OTHER DIMENSIONS NOT SHOWN BUT REQUIRED FOR TOOL BUILD, SEE MATH MODEL FOR PRECISE TOOL PATH DATA.

2. REFERENCE MATING COMPONENTS OR EQUIVALENT:

   TERMINAL 12047767
   MAX INSULATION CRIMP 3 HIGH X 2.6 WIDE.

PROCESS NOTE

1. LOOSE PLATING AND METAL 'FLAKES' TO BE WASHED FROM TERMINAL.

2. 12191889 IS SAME AS 12059894 BUT TERMINAL HAS TO BE WASHED AT MAKE DIE OR PROCESSED WITH NYOSIL-M25 LUBRICANT.

		0.381 X 34.52		15305307	A8	RESTRICTED		M36173B3 C42500 1/2 HD	210.35, 0.6)	226		103	4.4	3.2	2.55
				15317765	D7	-		M36173B3 C42500 1/2 HD	0.35-0.5	21	1.1-1.3	101	2.5	2.4	2.55
				12191889	D8	RESTRICTED	2	M36173B3 C42500 1/2 HD	0.35-0.5	21	2.4-1.47	101	3.8	2.4	2.55
		0.381 X 34.52		12124731	B	-	1	M36173B3 C42500 1/2 HD	0.5-0.8	19	2.4-1.84	101	4.4	3.2	2.55
		0.381 X 34.52		12059894	F7	-		M36173B3 C42500 1/2 HD	0.35-0.5	21	2.4-1.47	101	3.8	2.4	2.55
		0.381 X 34.52		12047686	D	-		P36074BN	0.35	22	1.86 MAX	102	3.6	2.2	2.6
12040993	J6	0.381 X 34.52	M140338 3	12047581	J7	-		M36173B3 C42500 1/2 HD	0.5-0.8	19	2.4-1.84	101	4.4	3.2	2.55
PART NO	REV	MAT'L SIZE	MAT'L SPEC	PART NO	REV	RESTRICTED USAGE	PROCESS NOTES	MAT'L SPEC	SIZE (MM²)	I.D.	DIA	TYPE	A ±0.3	B ±0.2	C MAX
UNPLATED				PLATED					CABLE						

(11) PROCESS SENSITIVE DIMENSION

DIMENSIONS ENCLOSED IN ( ) INDICATE DIMENSIONS INTENTIONALLY HAVE NO TOLERANCE (LIMITS ARE ESTABLISHED)

DIMENSIONAL RANGE (MM)	CHART D
FROM 0 TO 12	> 12

TOLERANCE UNLESS OTHERWISE SPECIFIED
±0.1
±0.2
ANGULAR TOLERANCE ±2°

THIRD ANGLE PROJECTION

DO NOT SCALE
USE MATH DATA

NX

* INDICATES THE DRAWN THROUGH A PART NUMBER INDICATES THAT PHYSICAL PARTS ARE NOT AVAILABLE FOR ORDERING.

PART NUMBERS THAT DO NOT HAVE A LINE PRESENT INDICATE THAT PHYSICAL PARTS ARE AVAILABLE FOR ORDERING.

CONTACT DELPHI SALES TO ASSURE AVAILABILITY OF PARTS.

DWG TYPE: PART DRAWING

STYLE

VOLUME (CM³) | DISTR CODE

UNLESS OTHERWISE SPECIFIED
THIS DRAWING IS AN ASSEMBLY WITH PARS 12.2M-1994 AS DEFINED BY THE ON GLOBAL DIMENSIONING AND TOLERANCING ASSENBLY-2001. SEPARATE PATTERNS OF DIMENSIONS MAY BE MIXED SEPARATELY REGARDLESS OF DATUM REFERENCES.

ALL DIMENSIONS ARE IN MILLIMETERS

REFERENCE

DELPHI
DELPHI PACKARD ELECTRICAL/ELECTRONIC ARCHITECTURE
WARREN, OH
COPYRIGHT 1996 DELPHI CORPORATION AND/OR ITS AFFILIATES.
ALL RIGHTS RESERVED.
REVISED 2002
THIS DRAWING IS THE PROPERTY OF DELPHI CORPORATION OR ITS AFFILIATES. THE REPRODUCTION, DISTRIBUTION AND UTILIZATION OF THIS DOCUMENT OR ITS RELATED DOC WITH DATA, AS WELL AS COMMUNICATION OF ANY CONTENT TO OTHERS, WITHOUT EXPRESS AUTHORIZATION, IS PROHIBITED.

		DATE
DR		
AP/D1	W. TURNBULL	22NOV96
AP/D2	W. TURNBULL	22NOV96
AP/D3	M. CHUPAK	22NOV96
AP/D4		
AP/D5		

SUBSTANCES OF CONCERN AND RECYCLED CONTENT PER DELPHI 12949001

MATERIAL: SEE CHART

DRAWING NAME: TAXI TERM M M/P 150

DRAWING NUMBER: 12040995

SIZE	SCALE	FRAME NO	SHEET NO	STG	REV	N/P
A0	10:1	1 OF 1	1 OF 3	R	09	-