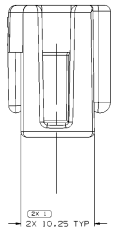
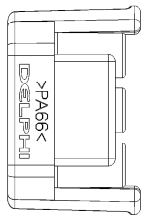
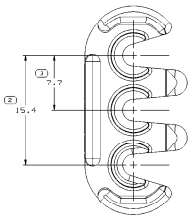
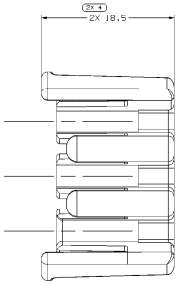
SYMBOL DEFINITION			MISSING SYMBOLS
A DIMENSION WITHOUT AN INSPECTION REPORT SYMBOL (□) OR (○) DOES NOT REQUIRE INSPECTION. IT MAY BE CONTROLLED ON THE INDIVIDUAL COMPONENT DRAWING.	TOTAL NO OF INSPECTIONS REQUIRED	15	NO MISSING SYMBOL NUMBER
(□) INDICATES THE DIMENSION IS SHOWN ON THE PART DRAWING AND THE TOOL MUST BE QUALIFIED AT 80% OF THE TOLERANCE SHOWN UNLESS SUPERSEDED BY A "TBT".	LAST NO. USED	6	

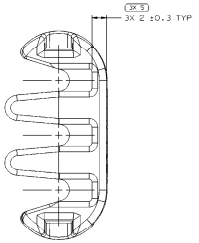
DWG STATUS DATE	STS	REV	N/P	CHG	ZONE	REVISION HISTORY	AUTH	DR	APVD I.E.	APVD
24DEC02	R	05	-	-		CREATED PD, ADDED OPTIONAL LOGO & MAT'L RECYCLING CODE NOTES AND MAT'L SPEC WAS R0067548 PA6 BLK	228956	AFM	EDV	RC
24JN03	R	05	AA	-		CREATED OPTIONAL CONSTRUCTION AND REVISED GRAPHICS	254467	JYD	JYD	RC
23JN04	R	05	AB	-		ADDED OPTIONAL CONSTRUCTION VIEWS	256127	LL	LL	TM

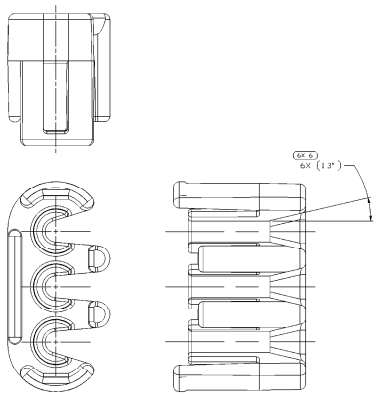












OPTIONAL CONSTRUCTION

NOTES

1. UNLESS OTHERWISE SPECIFIED AND/OR INDICATED:
   DIMENSIONS ARE TO FACE OF VIEW SHOWN AND AUTOMATICALLY ROUNDED BY COMPUTER FOR INSPECTION (SEE MATH MODEL FOR PRECISE DIMENSIONS). FOR ALL OTHER DIMENSIONS NOT SHOWN BUT REQUIRED FOR TOOL BUILD, SEE MATH MODEL FOR PRECISE TOOL PATH DATA.
2. MATERIAL RECYCLING CODE PER ISO 11469, (2,3)X10.11 CHARACTERS AS SHOWN TO BE LOCATED ON ANY EXTERIOR SURFACE.
3. MATING COMPONENTS OR EQUIVALENT:
   CONNECTORS 12034146 & 12040977.
4. (2,3)X10.1) DELPHI CORPORATE BRAND TO BE LOCATED ON ANY EXTERIOR SURFACE, PREFERABLY VISIBLE AT FINAL ASSEMBLY. OPTIONAL CONSTRUCTION TO BE "PED".

(4) PROCESS SENSITIVE DIMENSION

SHARP CORNER TOLERANCE: ± 0.1 MAX, ± 0.2 MAX

DIMENSIONAL RANGE (MM)										CHART 01
FROM	0.5	3.15	12.01	31.51	75.01	125.01	200.01	315.01	500.01	
TO	3.15	12.01	31.51	75.01	125.01	200.01	315.01	500.01	800.01	
ALLOWANCE (MM)	±0.05	±0.1	±0.15	±0.2	±0.25	±0.3	±0.4	±0.5	±0.8	

UNLESS OTHERWISE SPECIFIED DIMENSIONS AND TOLERANCES ARE ACCORDING TO ISO 1101:2004

THIRD ANGLE PROJECTION

DO NOT SCALE

USE MATH DATA

NAME / PART	PART DRAWING
STYLE	
VOLUME (CAP)	2.627
SYSTEM CODE	D
ROUTING	6900

UNLESS OTHERWISE SPECIFIED
THIS DOCUMENT IS IN ACCORDANCE WITH ASME Y14.5M-1994 AND ISO 1101:2004 WITH THE EXCEPTION OF THE FOLLOWING: (NO) ALL DIMENSIONS, TOLERANCES AND RELATED DRAWING ANNOTATIONS SHALL BE INTERPRETED PER ISO 1101:2004 AND ISO 14405:2003. (NO) ALL DIMENSIONS AND TOLERANCES ARE IN MILLIMETERS. ANGULAR TOLERANCES ARE ±0.5°. (NO) ALL DIMENSIONS ARE IN MILLIMETERS

REFERENCE	
NUMBER OF DRAWING SHEETS	1
SHEET NUMBER	1
ALL DIMENSIONS ARE IN MILLIMETERS	

DELPHI
DELPHI PACKARD ELECTRIC SYSTEMS
WARREN, OH

	DATE
DR APVD1 A. FLORES	08AUG02
APVD2 E. VALDEZ	08AUG02
APVD3 R. CORZAS	08AUG02
APVD4	
APVD5	

SUBSTANCES OF CONCERN AND RECYCLED CONTENT PER DELPHI 12049001

MATERIAL: M7542001 PA66 HS 1M BLK

DRAWING NAME: LOCK TPA M/P 280 3 BLK

DRAWING NUMBER: 12034145

SIZE	SCALE	FRAME NO	SHEET NO	STS	REV	N/P
A0	5:1	1 OF 1	1 OF 1	R	05	AB