THIS DRAWING IS UNPUBLISHED. RELEASED FOR PUBLICATION – , – .
© COPYRIGHT – By – ALL RIGHTS RESERVED.

LOC	DIST
J	—

REVISIONS 変更

P	LTR	DESCRIPTION	DATE	DWN	APVD
	–	SEE SHEET 1	–	—	—

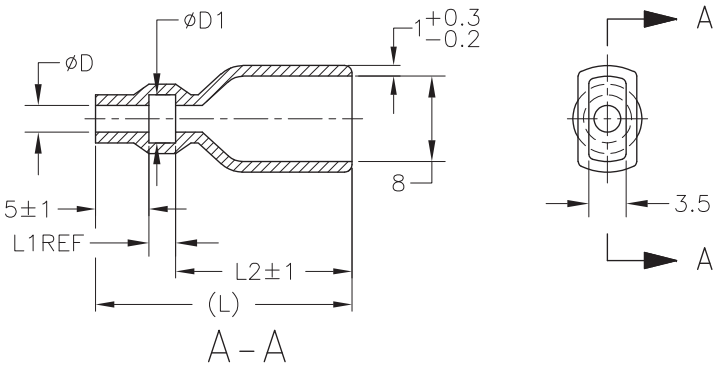

1. 材質：SS-108（一般）
2. 一般公差：±0.5
3. 適用製品規格は無し
4. 品川商工発行のカタログと本図で寸法が異なる場合は本図を優先する。

1. MATERIAL:SS-108(GENERAL)
2. GENERAL TOLERANCE: ±0.5
3. APPLICABLE PRODUCT SPEC NOT AVAILABLE
4. IN THE EVENT OF CONFLICT BETWEEN THE REQUIREMENTS OF THIS CUSTOMER DRAWING AND THE SHINAGAWA SHOKO CO LTD CATALOG THIS CUSTOMER DRAWING SHALL TAKE PRECEDENCE
5. OBSOLETE PARTS: OBSOLETE CIS STREAMLINING PER D.RENAUD/D.SINISI

	COLOR	L	L2	L1	ϕD1	ϕD	SHINAGAWA SHOKO PN	PART NUMBER
OBSOLETE	YELLOW	24	16.5	2.5	4.5	2.5	238025-2	4-170823-8
OBSOLETE	RED					2.5	238025-1	4-170823-7
OBSOLETE	CLEAR	25	17.5	3	5	4	238040	4-170823-9
OBSOLETE	BROWN	24.5	17.0	2.5	4.7	3.2	238032-3	3-170823-2
OBSOLETE	BLUE						238032-2	3-170823-1
5 OBSOLETE	CLEAR		16.5	3	4.5	3.5	238035-3	~~2-170823-7~~
		40.5	32.5				238035-2	2-170823-0
		35.5	27.5			3.5	238035-1	1-170823-9
		27	19.5	2.5	4.7	3.2	238032-1	1-170823-8
5 OBSOLETE		45	37.5	3	3.2	2	238020-1	~~1-170823-7~~
		25	17.5	2.5	5.3	3.8	238038	1-170823-6
		24	16.0	3	4.5	3.5	238035	1-170823-5
5 OBSOLETE		27	19.5	2.5	7.5	6	238060	~~170823-7~~
		25	17.5		6.3	4.8	238048	170823-6
		24	16.5		4.7	3.2	238032	170823-4
			16.0	3	3.2	2	238020	170823-3
				3	4.5	2.5	238025	170823-2

THIS DRAWING IS A CONTROLLED DOCUMENT.

DIMENSIONS: 単位：耗 mm

TOLERANCES UNLESS OTHERWISE SPECIFIED: 一般公差
0 PLC ± –
1 PLC ± –
2 PLC ± –
3 PLC ± –
4 PLC ± –
ANGLES ± –

MATERIAL 材料 –
FINISH 仕上 –

DWN A. YAMAGUCHI 31AUG00
CHK D. MATSUURA 31AUG02
APVD K. BETSUI 31AUG02
PRODUCT SPEC 製品規格 –
APPLICATION SPEC 取付適用規格 –
WEIGHT –

TE Connectivity

NAME 名称: INSULATION SLEEVE

SIZE	CAGE CODE	DRAWING NO 番号	RESTRICTED TO
A3	00779	C-170823	—

CUSTOMER DRAWING | SCALE 尺度 2:1 | SHEET 10 OF 13 | REV H3