THIS DRAWING IS UNPUBLISHED. RELEASED FOR PUBLICATION 20
© COPYRIGHT 20 BY - ALL RIGHTS RESERVED.

REVISIONS

P	LTR	DESCRIPTION	DATE	DWN	APVD
	A	INITIAL RELEASE	2SEP2015	N.P	X.X
	A1	ECR-16-016026	14NOV2016	N.P	X.X
	A2	ECR-19-006141	02JUL2020	G.W	C.W

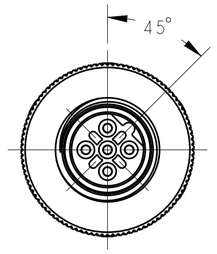

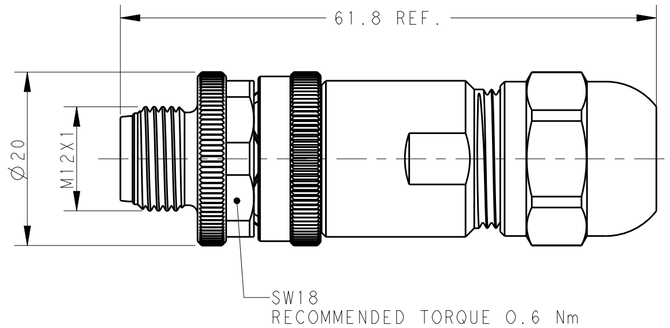

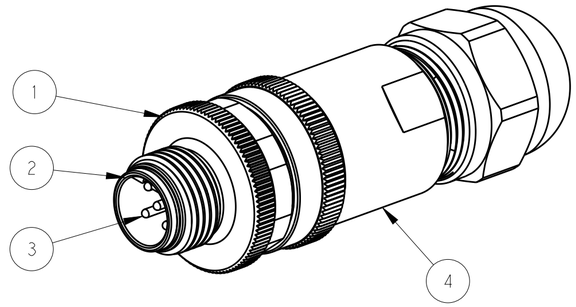

TECHNICAL DATA	T411141X02X-000	T411141X03X-000	T411141X04X-000	T411141X05X-000
RATED VOLTAGE	250V	250V	250V	60V
RATED CURRENT	4A	4A	4A	4A
POLLUTION DEGREE	3	3	3	3
OVERVOLTAGE CATEGORY	II	II	II	II
MATERIAL GROUP	II	II	II	II
CONTACT RESISTANCE	≤8mΩ	≤8mΩ	≤8mΩ	≤8mΩ
INSULATION RESISTANCE	>100MΩ	>100MΩ	>100MΩ	>100MΩ
DEGREE OF PROTECTION	IP67	IP67	IP67	IP67
OPERATION TEMPERATURE	-40~85°C	-40~85°C	-40~85°C	-40~85°C

PIN ARRANGEMENT
B-CODE

T411141X02X-000

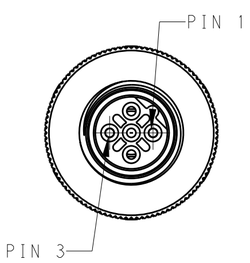

T411141X03X-000

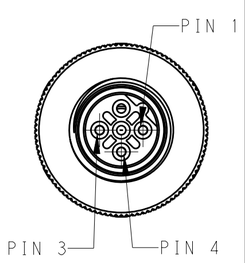

T411141X04X-000

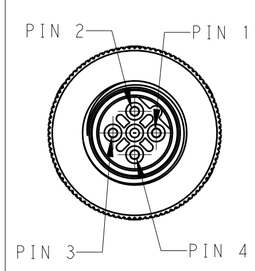

T411141X05X-000

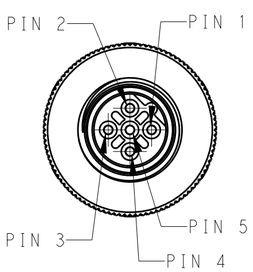

TE PN	TYPE
T4111412051-000	RPC-M12B-MS-5CON-PG9-SHU
T4111411051-000	RPC-M12B-MS-5CON-PG7-SHU
T4111412052-000	RPC-M12B-MS-5CON-PG9-SH
T4111411052-000	RPC-M12B-MS-5CON-PG7-SH
T4111412041-000	RPC-M12B-MS-4CON-PG9-SHU
T4111411041-000	RPC-M12B-MS-4CON-PG7-SHU
T4111412042-000	RPC-M12B-MS-4CON-PG9-SH
T4111411042-000	RPC-M12B-MS-4CON-PG7-SH
T4111412031-000	RPC-M12B-MS-3CON-PG9-SHU
T4111411031-000	RPC-M12B-MS-3CON-PG7-SHU
T4111412032-000	RPC-M12B-MS-3CON-PG9-SH
T4111411032-000	RPC-M12B-MS-3CON-PG7-SH
T4111412021-000	RPC-M12B-MS-2CON-PG9-SHU
T4111411021-000	RPC-M12B-MS-2CON-PG7-SHU
T4111412022-000	RPC-M12B-MS-2CON-PG9-SH
T4111411022-000	RPC-M12B-MS-2CON-PG7-SH

NOTE:
1. MATERIAL:
   ITEM NO.1:NUT -BRASS
   ITEM NO.2:HOUSING -PA
   ITEM NO.3:CONTACT -BRASS
   ITEM NO.4: HOUSING BODY: BRASS
2. CONTACT FINISH:
   GOLD OVER NICKEL OR SILVER OVER NICKEL
3. CABLE WIRES:
   18AWG/0.75mm² Max. FOR 2-5 PINS
   20AWG/0.50mm² Max. FOR 8 PINS
4. ALLDIMENSIONS ARE FOR NOMINAL REFERENCE ONLY UNLESS OTHERWISE STATED
5. PACKAGEING: 1PIECE IN A BAG
6. PN INFORMATION

T411141XXXX-000
- CONTACT FINISH:
  - 1: GOLD OVER NICKEL
  - 2: SILVER OVER NICKEL
- NUMBERS OF PINS:
  - 02: 2 PINS
  - 03: 3PINS
  - 04: 4 PINS
  - 05: 5PINS
  - 08: 8 PINS
  - ...
- CABLE OUTLET:
  - 1: PG7(CABLE FEED: 4-6mm)
  - 2: PG9(CABLE FEED: 6-8mm)

THIS DRAWING IS A CONTROLLED DOCUMENT.

DIMENSIONS: mm

TOLERANCES UNLESS OTHERWISE SPECIFIED:
0 PLC ±
1 PLC ±0.25
2 PLC ±0.15
3 PLC ±-
4 PLC ±-
ANGLES ±-

MATERIAL -
FINISH -

DWN BLAZE PENG 18AUG2015
CHK Kobby Zhao 24AUG2015
APVD Xiang Xu 24AUG2015
PRODUCT SPEC 108-106140
APPLICATION SPEC 114-137144
WEIGHT -

TE Connectivity

NAME M12 MALE, STRAIGHT SHIELDED CONNECTOR B CODE, SCREW TERMINAL

SIZE A2 | CAGE CODE - | DRAWING NO ©-T411141XXXX000 | RESTRICTED TO -

Customer Drawing | SCALE 2:1 | SHEET 1 OF 1 | REV A2

1471-9 (3/13)