THIS DRAWING IS UNPUBLISHED. RELEASED FOR PUBLICATION -,- .
© COPYRIGHT - By - ALL RIGHTS RESERVED.

| LOC | DIST |
|---|---|
| FT | 0 |

REVISIONS

| P | LTR | DESCRIPTION | DATE | DWN | APVD |
|---|---|---|---|---|---|
| | N3 | REVISED PER ECO-11-004587 | 11MAR11 | RK | HMR |

1 PART PACKAGED UNASSEMBLED.

2 CABLE CLAMPING AREA ADJUSTABLE FROM .010 TO .161 SQ IN BY REVERSING CLAMPING INSERTS. (2 INSERTS SUPPLIED)

3 CABLE CLAMPING AREA ADJUSTABLE FROM .010 TO .161 SQ IN BY CHANGING CLAMPING INSERTS. (4 INSERTS SUPPLIED, -4 ONLY)

4 .453 MAXIMUM CABLE OUTSIDE DIAMETER.

5 BULK PACKAGED KITS TO BE ORDERED IN MULTIPLES OF 200 ONLY.

6 NON-HEXAVALENT CHROMATE FINISH.

7 OBSOLETE PARTS: OBSOLETE CIS STREAMLINING PER D.RENAUD/D.SINISI

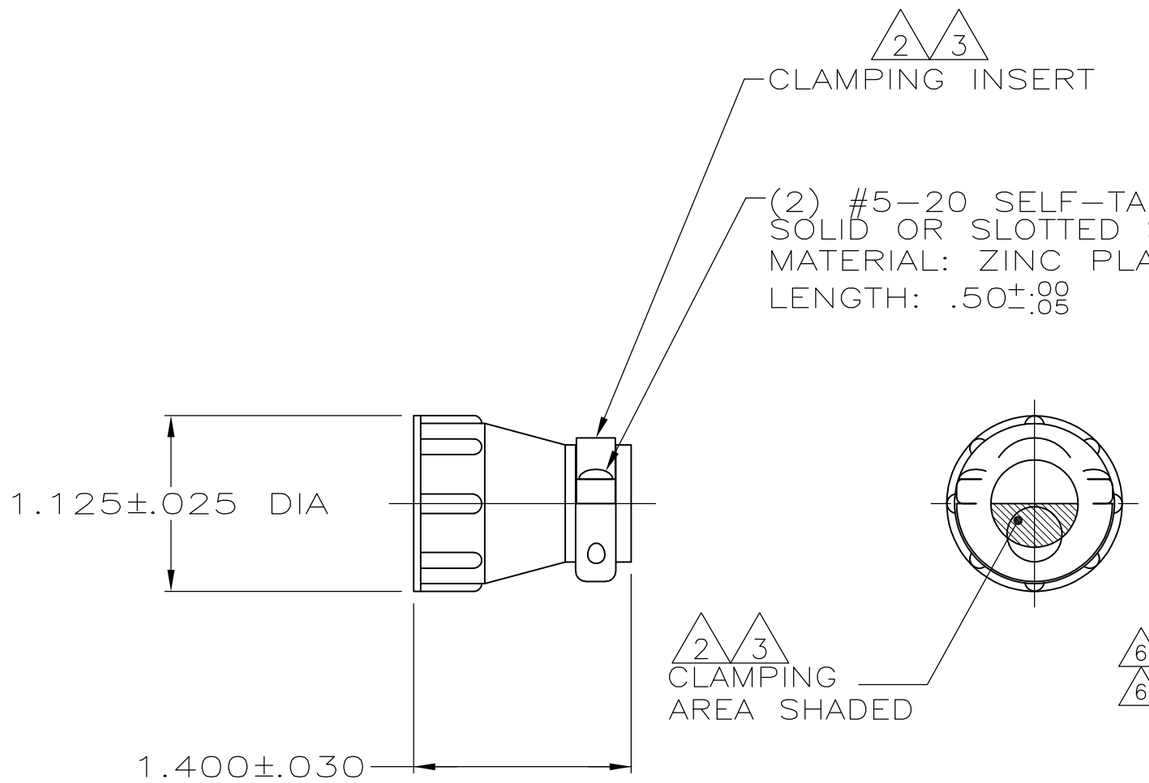


| | | | |
|---|---|---|---|
| 6 | | INDIVIDUAL | 1-206070-1 |
| 2 6 | | 5 BULK | 1-206070-0 |
| 2 6 7 | OBSOLETE | SMALL PACK | ~~206070-9~~ |
| 2 6 | | INDIVIDUAL | 206070-8 |
| 6 7 | OBSOLETE | INDIVIDUAL | ~~206070-7~~ |
| 6 7 | OBSOLETE | SMALL PACK | ~~206070-6~~ |
| | OBSOLETE | ~~5 BULK~~ | ~~206070-4~~ |
| 6 2 | SUPERSEDED BY 1-206070-0 | 5 BULK | 206070-3 |
| 6 2 | SUPERSEDED BY 206070-8 | INDIVIDUAL | 206070-1 |
| | | PACKAGING | PART NUMBER |

THIS DRAWING IS A CONTROLLED DOCUMENT.

DIMENSIONS: INCHES

TOLERANCES UNLESS OTHERWISE SPECIFIED:
0 PLC ± -
1 PLC ± -
2 PLC ± -
3 PLC ± -
4 PLC ± -
ANGLES ± -

MATERIAL: THERMOPLASTIC

FINISH: -

DWN A GRAFF 4/23/91
CHK W.G.LENKER 7-22-92
APVD - 
PRODUCT SPEC 108-10024
APPLICATION SPEC -
WEIGHT -

CUSTOMER DRAWING

TE Connectivity

NAME: CABLE CLAMP KIT, STANDARD, SHELL SIZE 17, CPC

| SIZE | CAGE CODE | DRAWING NO | RESTRICTED TO |
|---|---|---|---|
| A3 | 00779 | C-206070 | - |

SCALE NTS SHEET 1 OF 1 REV N3