THIS DRAWING IS UNPUBLISHED. RELEASED FOR PUBLICATION NOV ,2006.
© COPYRIGHT 2006 By – ALL RIGHTS RESERVED.

LOC	DIST
E	B

REVISIONS

P	LTR	DESCRIPTION	DATE	DWN	APVD
	C1	REVISED PER ECR-16-015303	28OCT2016	BW	RS

	–	9.50	19.40	6.00	6.70	8.70	10.00	10.50	CT125	5-1814821-7
OBSOLETE	~~–~~	~~9.50~~	~~19.40~~	~~6.00~~	~~6.70~~	~~8.70~~	~~10.00~~	~~10.50~~	~~CT125~~	~~5-1814821-6~~
OBSOLETE	~~9-1478243-0~~	~~8.50~~	~~19.40~~	~~4.85~~	~~5.70~~	~~7.70~~	~~9.00~~	~~9.50~~	~~CT100~~	~~5-1814821-5~~
OBSOLETE	~~9-1478243-0~~	~~8.50~~	~~19.40~~	~~4.85~~	~~5.70~~	~~7.70~~	~~9.00~~	~~9.50~~	~~CT100~~	~~5-1814821-4~~
	1583581-1	10.20	19.40	4.85	5.50	9.50	10.80	11.20	RG6/U	5-1814821-3
OBSOLETE	~~1583581-1~~	~~10.20~~	~~19.40~~	~~4.85~~	~~5.50~~	~~9.50~~	~~10.80~~	~~11.20~~	~~RG6/U~~	~~5-1814821-2~~
	9-1478243-0	8.50	20.40	3.90	4.70	7.50	9.00	9.50	RG59B/U, 62A/U, 140/U, 210/U, URM90, Belden 9291, 9291, KX6A, KX25, KX52, KX53	5-1814821-1
	9-1478243-0	8.50	20.40	3.90	4.70	7.50	9.00	9.50	RG59B/U, 62A/U, 140/U, 210/U, URM90, Belden 9291, 9291, KX6A, KX25, KX52, KX53	5-1814821-0
	DIE SET	G	F	E	D	C	B	A	CABLE GROUPS	PART NO.
	DIMENSIONS									

NOTES

1. SINGLE PACK IN ACCORDANCE WITH AMP SPEC 107-3275
2. 100 TRAY PACK IN ACCORDANCE WITH AMP SPEC 107-3275
3. Ni PLATING
4. HAND TOOL: 9-1478240-0
5. FOR TECHNICAL DATA REFER TO YOUR LOCAL TE CONNECTIVITY SALES OFFICE
6. ALL DIMENSIONS ARE NOMINAL FOR REFERENCE ONLY UNLESS OTHERWISE STATED

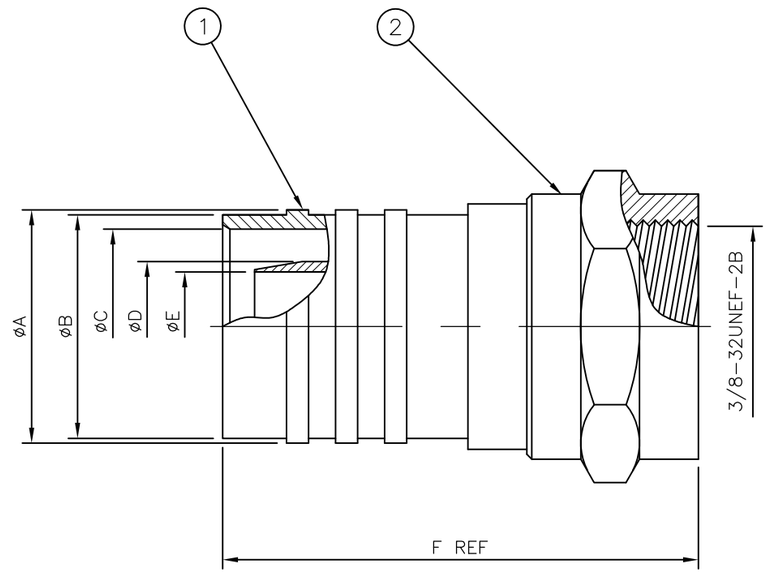

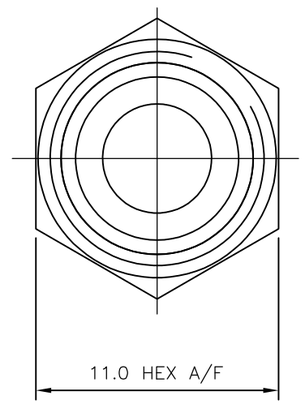

RECOMMENDED CABLE STRIPPING DIM'S

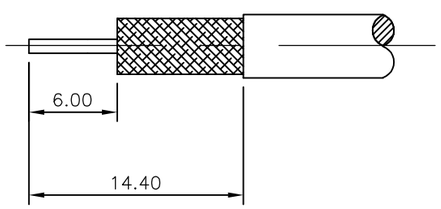

RECOMMENDED CRIMP OUTER FERRULE A/F HEX

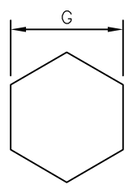

	OBSOLETE	OBSOLETE	OBSOLETE		OBSOLETE					
1	~~1~~	~~1~~	~~1~~	1	~~1~~	1	1	ZINC ALLOY 3	COUPLING NUT	2
1	~~1~~	~~1~~	~~1~~	1	~~1~~	1	1	BRASS 3	BODY	1
5--7	5--6	5--5	5--4	5--3	5--2	5--1	5--0	MATERIAL	DESCRIPTION	ITEM
2	1	1	2	2	1	1	2			
QUANTITY PER ASSY								PARTS LIST		

THIS DRAWING IS A CONTROLLED DOCUMENT.

DIMENSIONS: mm

TOLERANCES UNLESS OTHERWISE SPECIFIED:
0 PLC ± 0.5
1 PLC ± 0.4
2 PLC ± 0.3
3 PLC ± –
4 PLC ± –
ANGLES ± –

MATERIAL: SEE TABLE

FINISH: –

DWN ANSON MA 14FEB09
CHK RITA ZUO 14FEB09
APVD BOB ZHAO 14FEB09
PRODUCT SPEC 108-112000
APPLICATION SPEC –
WEIGHT 0

TE Connectivity

NAME: F TYPE STRAIGHT PLUG HEX CRIMP

SIZE	CAGE CODE	DRAWING NO	RESTRICTED TO
A3	00779	C-1814821	–

CUSTOMER DRAWING

SCALE	SHEET	REV
NTS	1 OF 1	C1