THIS DRAWING IS UNPUBLISHED. RELEASED FOR PUBLICATION 2004
© COPYRIGHT BY ALL RIGHTS RESERVED.

LOC	DIST
A1	–

PROJECT-NO.: A89-52101

REVISIONS

P	LTR	DESCRIPTION	DATE	DWN	APVD
	F3	REVISED PER ECO-11-005150	28APR11	RK	HMR

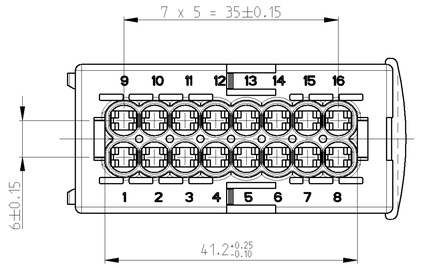

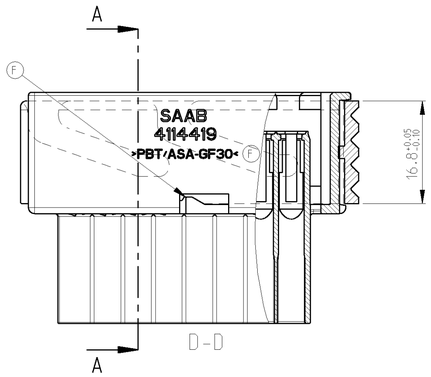

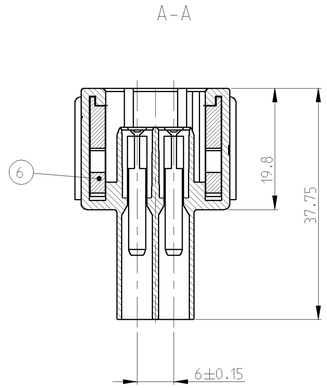

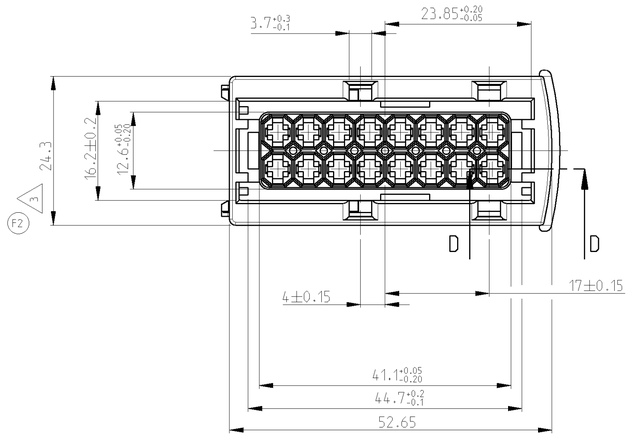

NOTES :

1. Au-VERSION OF CONTACT IS 1-xxxxxx-1
   Au-Version des Kontaktes ist 1-xxxxxx-1

F1 2. WATER TIGHTNESS ACC. GMI 12590: 5.10.3
   FURTHER INFORMATIONS SEE PRODUCT SPECIFICATION 108-18102-1/...-9
   Wasserdichtheit nach GMI 12590, 5.10.3
   Weitere Informationen siehe
   Produktspezifikation 108-18102-1/...-9

F2 3. Einfall bis auf 23.5mm zulässig
   SHRINKAGE UP TO 23.5MM ALLOWED

F1

CONTACT-SYSTEM	ORDER-NO. STRIP	WIRE SIZE [mm²]	MATERIAL	FINISH	SINGLE WIRE SEAL	COLOR	WATER-TIGHTNESS 2
JPT	1 0-0929937-1	1.5 - 2.5	CuFe 2	TINNED	0-0828905-1	WHITE	IPX 9K
JPT	1 0-0929939-1	0.75 - 1.0	CuFe 2	TINNED	0-0828904-1	LIGHT BLUE	IPX 9K
JPT	1 0-0929939-1	0.5	CuFe 2	TINNED	0-0963294-1	BLUE	IPX 9K
JPT	1 0-0929941-1	0.35	CuFe 2	TINNED	0-0963294-1	BLUE	IPX 9K

CODING A1

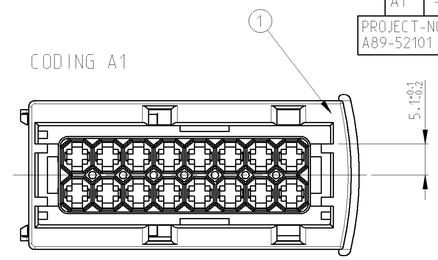

CODING B1

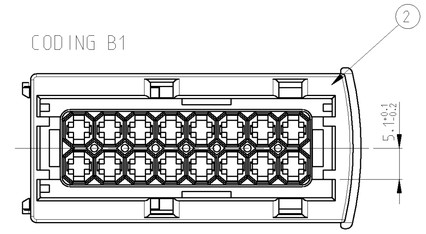

CODING C1

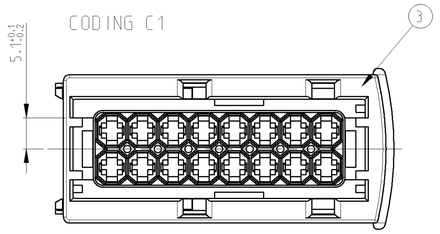

CODING D1

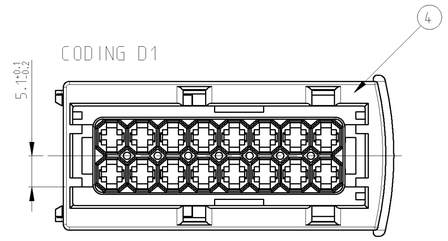

CODING N

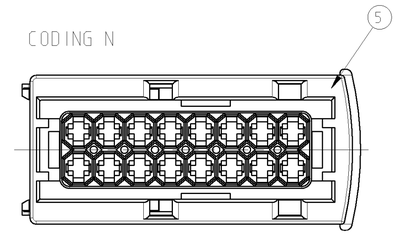

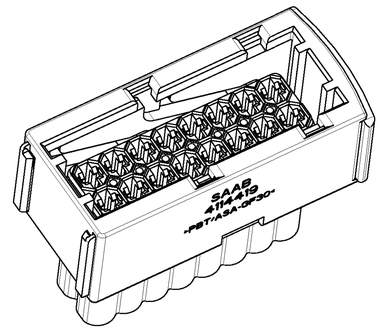

2:1

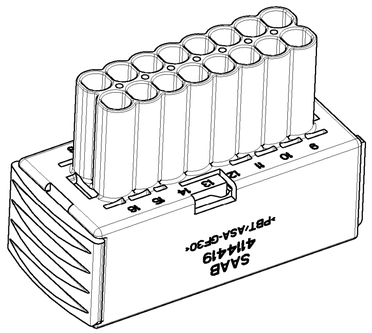

2:1

F2

CUSTOMER PART NO.	GM SIGN	PART NO.	REV.	PCS	MATERIAL	COLOR	DESCRIPTION	ITEM NO.
4114401		5-963217-1 CODING N	E	1	PBT/ASA-GF30	RED	SLIDE	6
				1	PBT/ASA-GF30	WHITE	JPT HSG., 16POS.	5
4114443	-	4-963217-1 CODING D1	E	1	PBT/ASA-GF30	RED	SLIDE	6
				1	PBT/ASA-GF30	BROWN	JPT HSG., 16POS.	4
4114435	-	3-963217-1 CODING C1	E	1	PBT/ASA-GF30	RED	SLIDE	6
				1	PBT/ASA-GF30	BLUE	JPT HSG., 16POS.	3
4114427	-	2-963217-1 CODING B1	F	1	PBT/ASA-GF30	RED	SLIDE	6
				1	PBT/ASA-GF30	GREY	JPT HSG., 16POS.	2
4114419	ZFW 16-2	1-963217-1 CODING A1	F	1	PBT/ASA-GF30	RED	SLIDE	6
				1	PBT/ASA-GF30	BLACK	JPT HSG., 16POS.	1

DIMENSIONS: mm

TOLERANCES UNLESS OTHERWISE SPECIFIED:
0 PLC ±
1 PLC ±0.3
2 PLC ±0.3
3 PLC ±0.3
4 PLC ±
ANGLES ±

MATERIAL – –
FINISH – –

DWN S. GARCIA 29-MAR-1999
CHK W.STABROTH 29-MAR-1999
APVD –
PRODUCT SPEC 108-18102
APPLICATION SPEC 114-18175
WEIGHT –

TE Connectivity

NAME JPT REC-HOUSING , 16POS., ASSY
JPT Buchsengehäuse, 16pol.,Assy
–

SIZE	CAGE CODE	DRAWING NO	RESTRICTED TO
A1	00779	C-963217	–

CUSTOMER DRAWING | SCALE 2:1 | SHEET 1 OF 1 | REV F3