DWG. NO. SD-1396-002

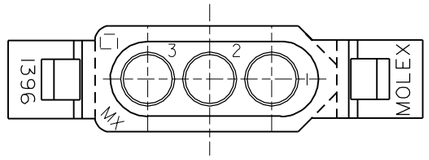

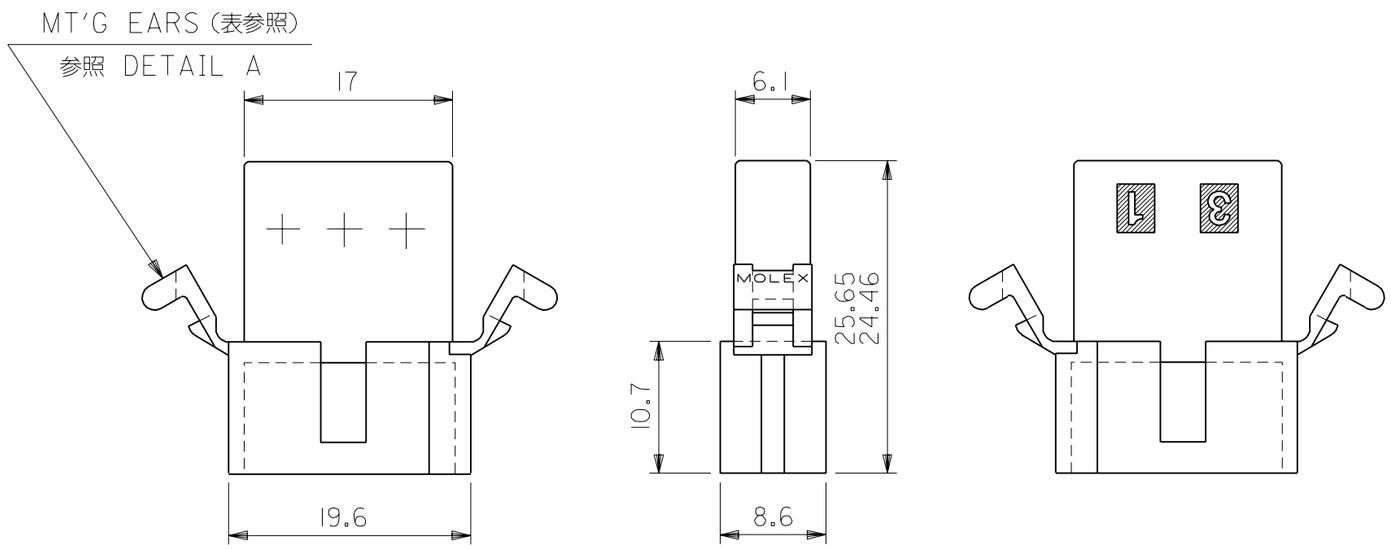

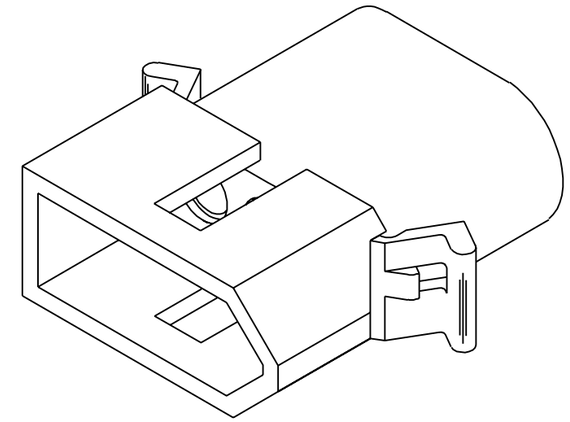

PLUG

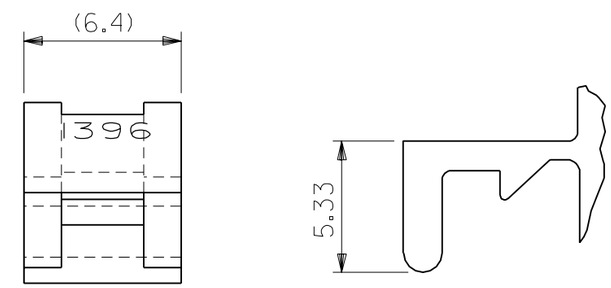

DETAIL A
(SCALE 4:1)

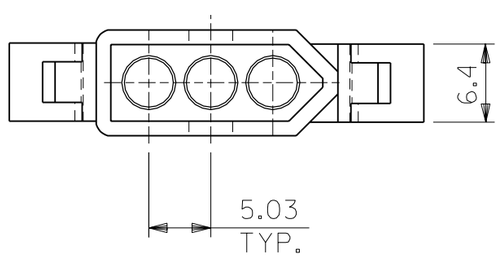

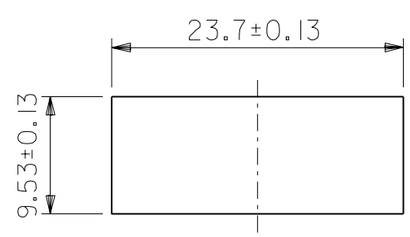

パネル取付穴寸法
(パネル厚 2.29最大)

1396P1	03-09-2032	無 WITHOUT
1396P	03-09-2031	有 WITH
ENG. NO.	EDP NO.	MT'G EARS

MODEL NO.	03-09-2***	DIMENSIONS: ☐ mm/INCH ☐ INCH/mm ☒ mm ONLY	SHT / REV: REVISE ON CAD ONLY
SCALE 2 : 1	DESIGN UNITS ☒mm ☐INCH	THIRD ANGLE PROJECTION	
DRAWN BY & DATE K.KOHAMA '00/08/28		TITLE: 3 CIRCUITS PLUG HSG (0.093 DIA TERMINAL)	
CHECKED BY & DATE T.YAMAGUCHI '00/08/28			
APPROVED BY & DATE M.FUKUSHIMA '00/08/28		molex MOLEX INCORPORATED	
CAD FILENAME 1396002.S01	MATERIAL NO. SEE NOTES	DRAWING NO. SD-1396-002	SHEET NO. 1 OF 1

GENERAL TOLERANCES: (UNLESS SPECIFIED) 一般公差	
10 UNDER 未満	±0.25 ~~±0.2~~
10 OVER 以上 30 UNDER 未満	±0.3 ~~±0.25~~
30 OVER 以上	±0.35 ~~±0.3~~
ANGLE 角度	±3°

MATERIAL 材料: NYLON66 94V-2

FINISH 仕上げ

WIRE RANGE 適用電線範囲

INS. RANGE 被覆外径

DESCRIPTION

RELEASED
EC NO. JC2001-0078
DRWN: K.KOHAMA '00/08/28
CH'K: T.YAMAGUCHI
APPR: M.FUKUSHIMA

EC NO.	DRWN:	CH'K:	APPR:

REV: 0

DO NOT SCALE DRAWING

THIS DRAWING CONTAINS INFORMATION THAT IS PROPRIETARY TO MOLEX INCORPORATED AND SHOULD NOT BE USED WITHOUT WRITTEN PERMISSION.

SIZE B

1396002.S01

EN-02J(097) MXJ-54