THIS DRAWING IS UNPUBLISHED. RELEASED FOR PUBLICATION 2018
© COPYRIGHT 1994 BY TE CONNECTIVITY ALL RIGHTS RESERVED.

REVISIONS

| P | LTR | DESCRIPTION | DATE | DWN | APVD |
|---|---|---|---|---|---|
| | A | REVISED PER E.O. P15996 | 25MAY1999 | DM | RDR |
| | B | REVISED PER E.O. P21222 | 07DEC2011 | DM | RDR |
| | C | REVISED PER PCN E-18-001206 | 24JAN2018 | JA | DM |
| | C1 | REVISED PER PCN E-19-008828 | 04JUNE2019 | JA | IG |

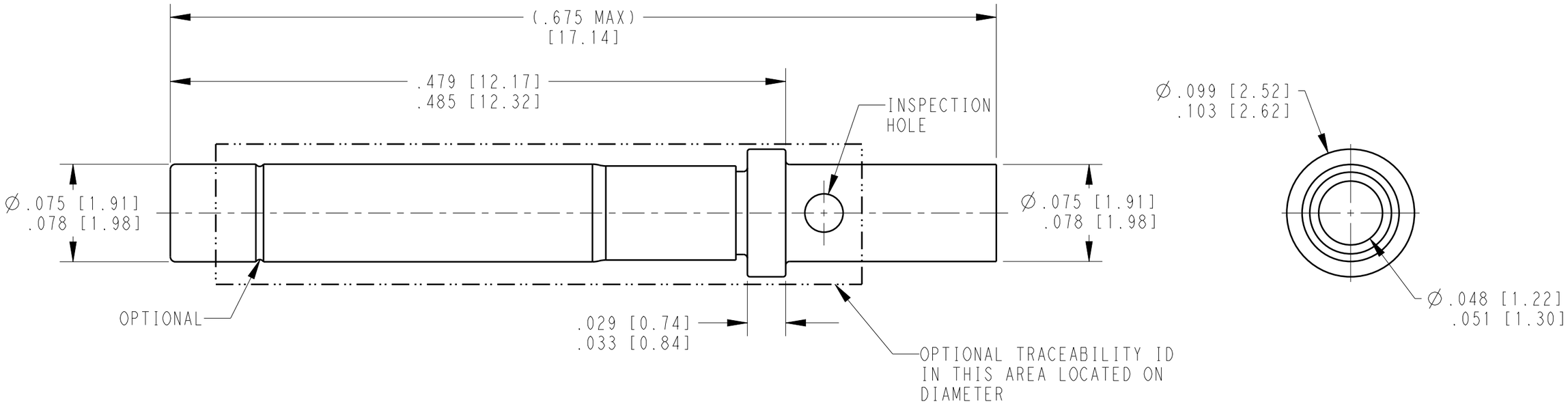


| TE INTERNAL PN | DEUTSCH PN | PLATING |
|---|---|---|
| 0462-201-2031 | 0462-201-2031 | GOLD |
| 0462-201-20141 | 0462-201-20141 | NICKEL |
| 0462-201-20309 | 0462-201-20309 | TIN |

1. WIRE RANGE : 20 AWG [0.5 mm²].

NOTES: UNLESS OTHERWISE SPECIFIED

THIS DRAWING IS A CONTROLLED DOCUMENT.

DIMENSIONS: INCHES [mm]

TOLERANCES UNLESS OTHERWISE SPECIFIED:
0 PLC ±
1 PLC ±
2 PLC ±
3 PLC ±
4 PLC ±
ANGLES ±

MATERIAL

FINISH

DWN D.MEYER 16APR1999
CHK D.MEYER 07DEC2011
APVD R.REED 07DEC2011
PRODUCT SPEC 0425-015-0000
APPLICATION SPEC 0425-205-0000
WEIGHT 0.27g

CUSTOMER DRAWING

TE Connectivity

NAME CONTACT SOCKET SIZE 20

| SIZE | CAGE CODE | DRAWING NO | RESTRICTED TO |
|---|---|---|---|
| A3 | 4AFU8 | C-0462-201-20XX | - |

SCALE 12:1 SHEET 1 OF 1 REV C1

1470-19 (3/13)