THIS DRAWING IS UNPUBLISHED | RELEASED FOR PUBLICATION 2018
© COPYRIGHT 1997 BY TE CONNECTIVITY ALL RIGHTS RESERVED.

REVISIONS

P	LTR	DESCRIPTION	DATE	DWN	APVD
	NC	NEW RELEASE PER E.O P15504	22FEB2007	-	RDR
	A	NEW RELEASE PER E.O. P20205	04JUN2009	DM	RDR
	B	REVISED PER E-18-001206	24JAN2018	JA	DM

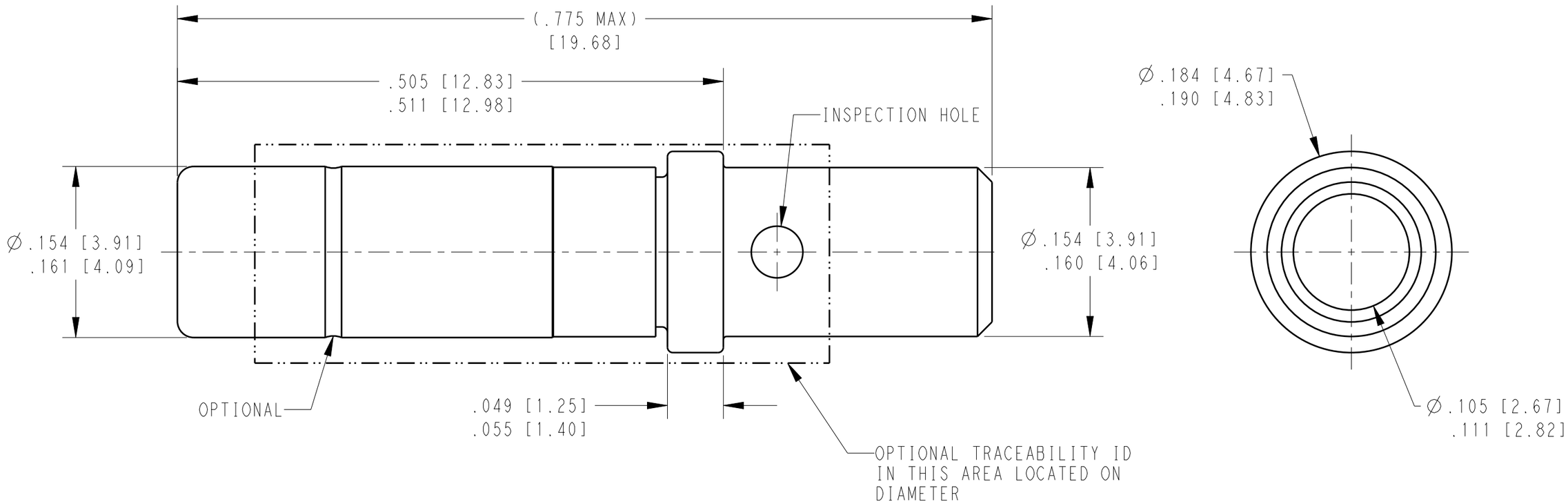

TE INTERNAL PN	DEUTSCH PN	PLATING
0462-203-1231	0462-203-1231	GOLD
0462-203-12141	0462-203-12141	NICKEL

1. WIRE RANGE : 14 AWG TO 12 AWG [2.0 - 3.0 mm²]

NOTES:

THIS DRAWING IS A CONTROLLED DOCUMENT.

DIMENSIONS: INCHES [mm]

TOLERANCES UNLESS OTHERWISE SPECIFIED:
0 PLC ±
1 PLC ±
2 PLC ±
3 PLC ±
4 PLC ±
ANGLES ±

MATERIAL

FINISH

DWN D.MEYER 16DEC1997
CHK M.GONZALES 03JUN2009
APVD R.REED 04JUN2009
PRODUCT SPEC 0425-015-0000
APPLICATION SPEC 0425-205-0000
WEIGHT 1.27g

TE Connectivity

NAME CONTACT SOCKET SIZE 12

SIZE	CAGE CODE	DRAWING NO	RESTRICTED TO
A3	4AFU8	C-0462-203-12XX	

CUSTOMER DRAWING | SCALE 10:1 | SHEET 1 OF 1 | REV B

1470-19 (3/13)