DIBUJADO EN PROYECCIONES | AMERICANAS | EUROPEAS

P	F	ZONE	LTR	DESCRIPTION	DATE	APPROVED
			A1	REVISED PER ECO-11-005294	13APR11	HMR

REVISIONS

Fig.1 Positive lock for secure tap

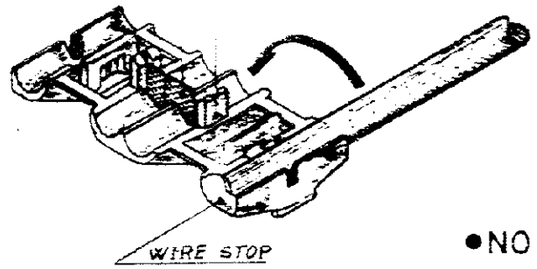

1st STEP

LAY THE CONDUCTOR IN THE HOUSING AS SHOWN

2nd STEP

FOLD UP THE HOUSING ACCORDING THE ARROW TILL LEAN THE CONDUCTOR AGAINST THE CONTACT

- NO SPECIAL TOOLS
- NO WIRE STRIPPING
- FOR SOLID OR STRANDED WIRE OF SECTION 4 TO 6 mm
- EASY ASSEMBLY

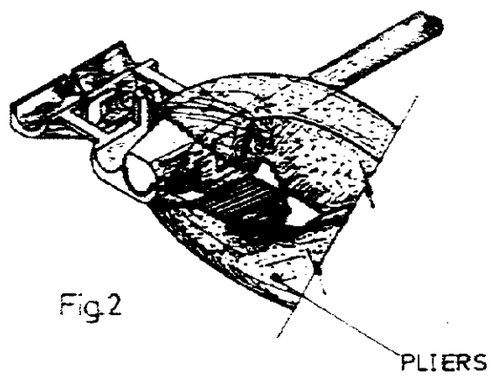

Fig.2

3rd STEP

SQUEEZE WITH TOOLING (PLIERS FIG 2) TILL POSITIVE LOCK IS LATCHED

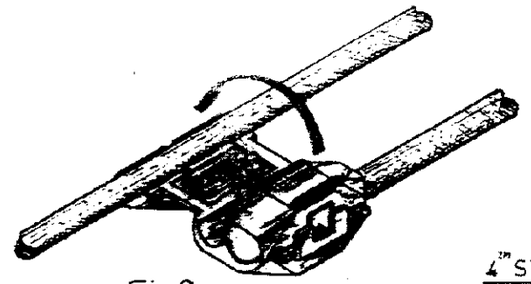

Fig.3

4th STEP

FOLD UP ACCORDING THE ARROW (FIG.3) TILL LEAN THE CONTACT AGAINST THE CONDUCTOR

5th STEP

SQUEEZE TILL LATCH THE POSITIVE LOCK

FINISHED ASSEMBLY

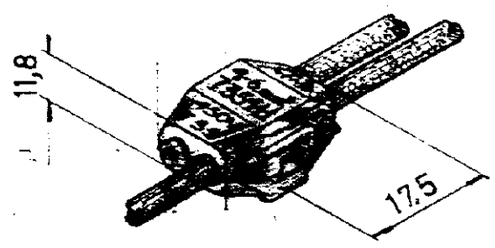

P.N.	MATERIAL	ACABADO
735411	LATON / NYLON COLOR AMARILLO	TIN PLATED / MOULDED

PLANO DE CLIENTE SOLO PARA REFERENCIA

NUMERO PN-735411

DIB. Dominguez 8.9.92 FECHA

COMP. FECHA

MIL. FECHA

APR. FECHA

TE Connectivity

GAMA HILO 4-6 mm² | GAMA AISLANTE Ø 5 mm | PRIMER USO General

ESCALA — | LOC AL | B | Nº PN-735411 | REV A1

NOMBRE ELECTRO TAP CONNECTOR

DIMENSIONES EN M.M.

8 7 6 5 4 3 2 1