THIS DRAWING IS UNPUBLISHED. RELEASED FOR PUBLICATION 20
© COPYRIGHT 20 BY - ALL RIGHTS RESERVED.

| LOC | DIST |
|---|---|
| CM | 00 |

REVISIONS

| P | LTR | DESCRIPTION | DATE | DWN | APVD |
|---|---|---|---|---|---|
| | B1 | REVISED PER ECO-11-005027 | 15MAR2011 | RK | HMR |

1. DIMENSIONS IN BRACKETS ARE IN INCHES.

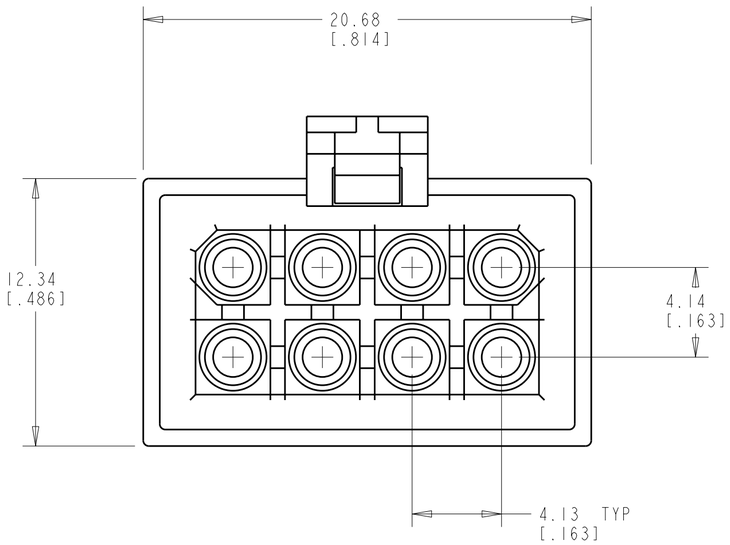


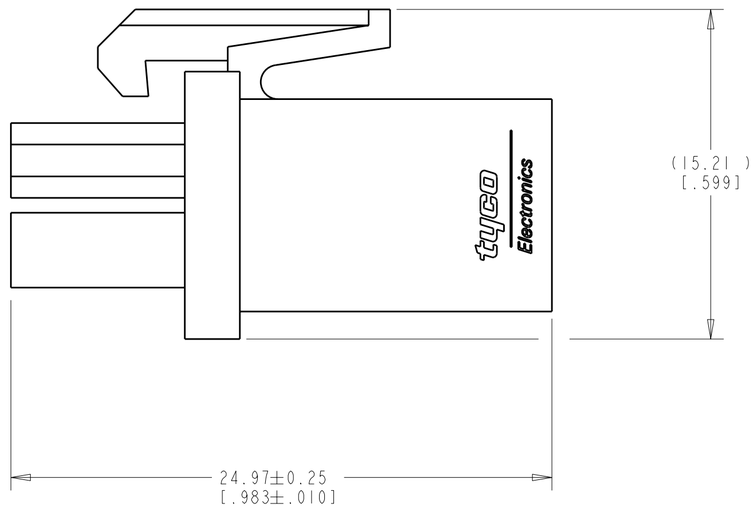


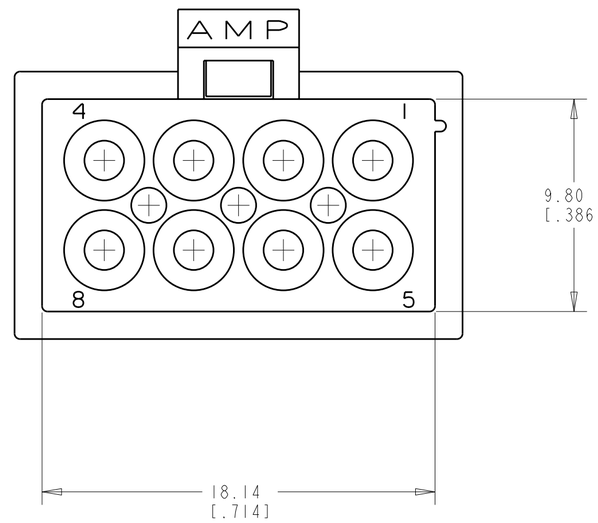


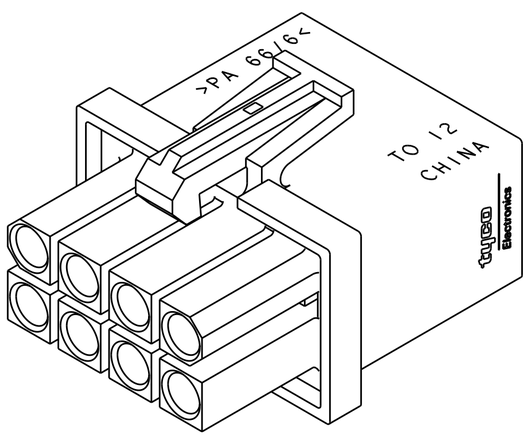


3 DIMENSIONAL MODEL
SCALE 4:1

METRIC

THIS DRAWING IS A CONTROLLED DOCUMENT.

DIMENSIONS: mm[INCHES]

TOLERANCES UNLESS OTHERWISE SPECIFIED:
0 PLC ±-
1 PLC ±-
2 PLC ±.013[.005]
3 PLC ±-
4 PLC ±-
ANGLES ±0°30'

MATERIAL: NYLON, UL94V-0, WHITE

FINISH: -

DWN K. WHITAKER 10MAY2000
CHK K. COBLE 10MAY2000
APVD K. COBLE 10MAY2000

PRODUCT SPEC: -
APPLICATION SPEC: -
WEIGHT: -

TE Connectivity

NAME: PLUG, 8 CIRCUIT, MINI UNIVERSAL MATE-N-LOK(TM)

SIZE A2 | CAGE CODE 00779 | DRAWING NO C-794821 | RESTRICTED TO -

CUSTOMER DRAWING | SCALE 5:1 | SHEET 1 OF 1 | REV B1

794821-1
PART NUMBER

794821

1471-9 (3/11)

Pro/ENGINEER DRAWING