THIS DRAWING AND DESIGN HEREON CONSTITUTES A PROPRIETARY DESIGN OF PACKARD ELECTRIC DIVISION AND IS NOT TO BE DUPLICATED OR REPRODUCED WITHOUT AUTHORITY OF PACKARD ELECTRIC DIVISION

DO NOT SCALE

PART NO 1210 3881

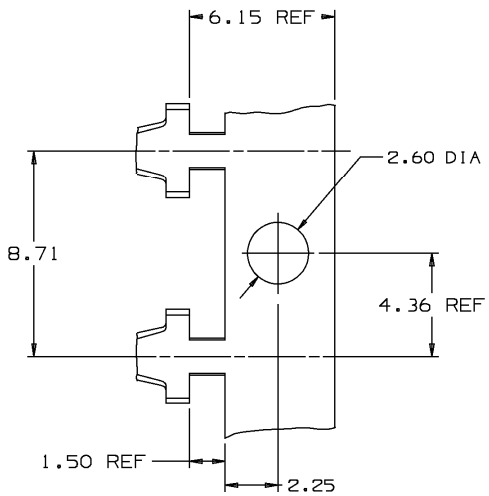

CARRIER STRIP
(SCALE NONE)

DATE	SYM	REVISION RECORD	AUTH	DR	CK
24SE92	—	REDRAWN AND UPDATED			
		TO LATEST STANDARDS			
		REV LEVEL REMAINS			
		AT "A"	920007	JK	JC
24FE93	—	REDRAWN TO "C" SIZE			
		REV LEVEL REMAINS			
		AT "A"	154464	DE	DE
05AU94	—	ADDED 4.3±0.3 DIM-			
		NO REV UPDATE	161276	TW	TW
09NO94	—	DRAWING REVISED PER			
		CUSTOMER REQUEST			
		REV LEVEL REMAINS			
		AT "A"	164566	JVM	SMP
25MR96	B	REVISED	171061	JGS	JGS
21JN96	—	REVISED - REV LEVEL			
		REMAINS AT "B"	173815	MRG	RPC

PART NO 1210 3881

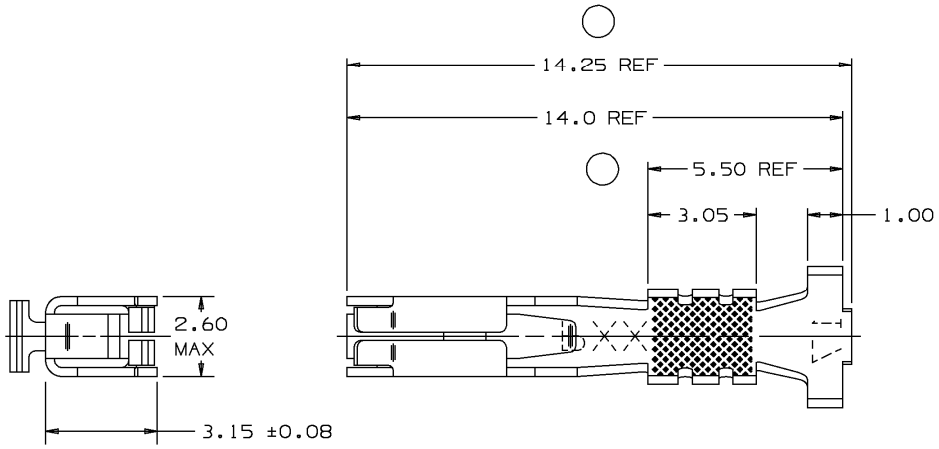

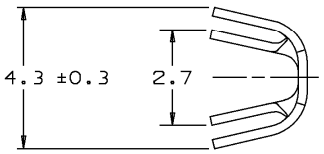

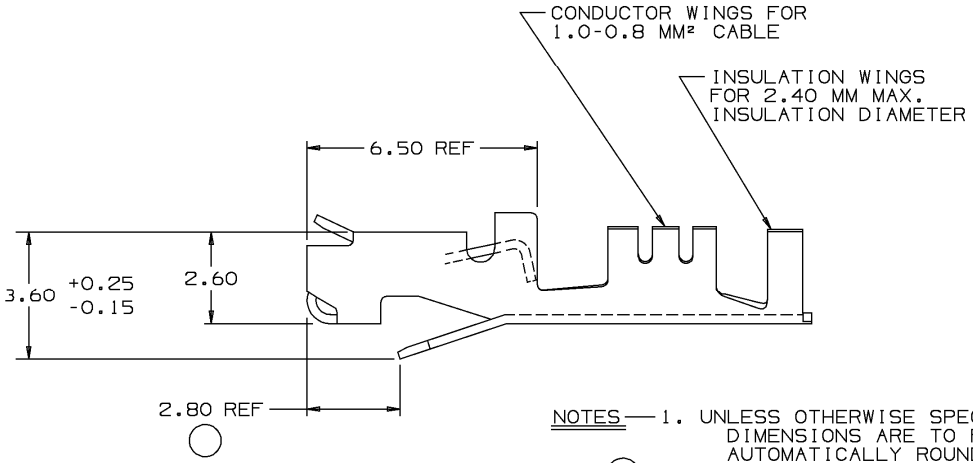

NOTES —
1. UNLESS OTHERWISE SPECIFIED AND/OR INDICATED: DIMENSIONS ARE TO FACE OF VIEW SHOWN AND AUTOMATICALLY ROUNDED BY COMPUTER FOR INSPECTION. (SEE MATH MODEL FOR PRECISE DIMENSION)
2. DIMENSIONS MARKED "REF" ARE FOR REFERENCE ONLY AND NO TOLERANCE LIMITS ARE ESTABLISHED.
3. ENGAGE : 3-10N
   DISENGAGE : 1.5-8N
4. REFERENCE PACKARD GAGE # G-8261

PACKARD ELECTRIC DIVISION
GENERAL MOTORS CORPORATION
WARREN, OHIO

101A
197A

Unigraphics II

THIRD ANGLE PROJECTION

METRIC
DIMENSIONS ARE IN MILLIMETERS UNLESS OTHERWISE SPECIFIED

TOLERANCE UNLESS OTHERWISE SPECIFIED
DECIMAL: ANGULAR ±1°30'
ONE PLACE ±0.2
TWO PLACE ±0.10

CODE NO 6900 6901
QC

DES HENRY HOKE 22MY91
DWG DATE 22MY91
DR HENRY HOKE 22MY91
SCALE NONE
CK DAVID BECK 06JN91
REFERENCE NO SHT #1
12020717 "AO" SIZE
APPR
VOL CM³

MATERIAL SPEC
0.254 THK SILICON BRONZE - TIN PLATED

NAME
TERM F M/P 150 SER P2S

PART NUMBER 1210 3881
SIZE A2
OUTLINE DRAWING

/users/gdc/cgcwtp01
TIME: 7:07 DATE: 6--26--96
USERID: cgcwtp01
NAME: 12020717-tpd-01.prt

Date: 18-May-99 Time: 12:13
Part: 12020717-01
Message: