SYMBOL DEFINITION		
A DIMENSION WITHOUT AN INSPECTION REPORT SYMBOL (__) DOES NOT REQUIRE INSPECTION. IT MAY BE CONTROLLED ON THE INDIVIDUAL COMPONENT DRAWING.	TOTAL NO OF INSPECTIONS REQUIRED	77
	LAST NO. USED	64

MISSING SYMBOLS
NO MISSING SYMBOL NUMBER

DWG STATUS					ZONE	REVISION HISTORY	AUTH	DR	AP/D1	AP/D2
DATE	STG	REV	N/P	CHG						
31OC02	R	01	-	-		CLEARED REVISION COLUMN, REDRAWN TO PD & 15452173 - RELEASED	232301	ECB	JVM	WDB
06OC11	R	02	-	-		ALL PARTS - CREATED APPLICATION DATA	415663	CBG	CBG	GEM
03JA14	R	03	-	-		ALL PARTS - ADDED LUBEWELL LUBRICANT NOTE	424997	JVR	JVM	KRM

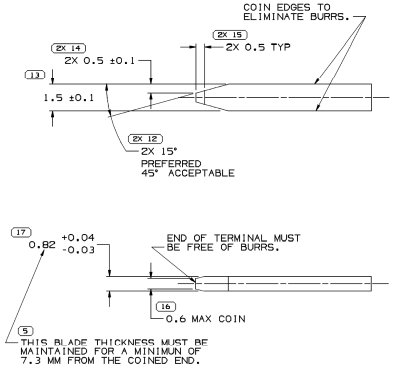

MATING TERMINAL INFORMATION
SCALE 10:1

RECOMMENDED MATERIAL:
P-1546 (CA210) EXTRA SPRING TEMPER-TIN PLATED BRASS

PLATING THICKNESS: 0.005-0.003 MM

TENSILE STRENGTH: 480-430 MPa

INSPECTION SYMBOLS SHOWN IN THESE VIEWS ARE FOR REFERENCE ONLY

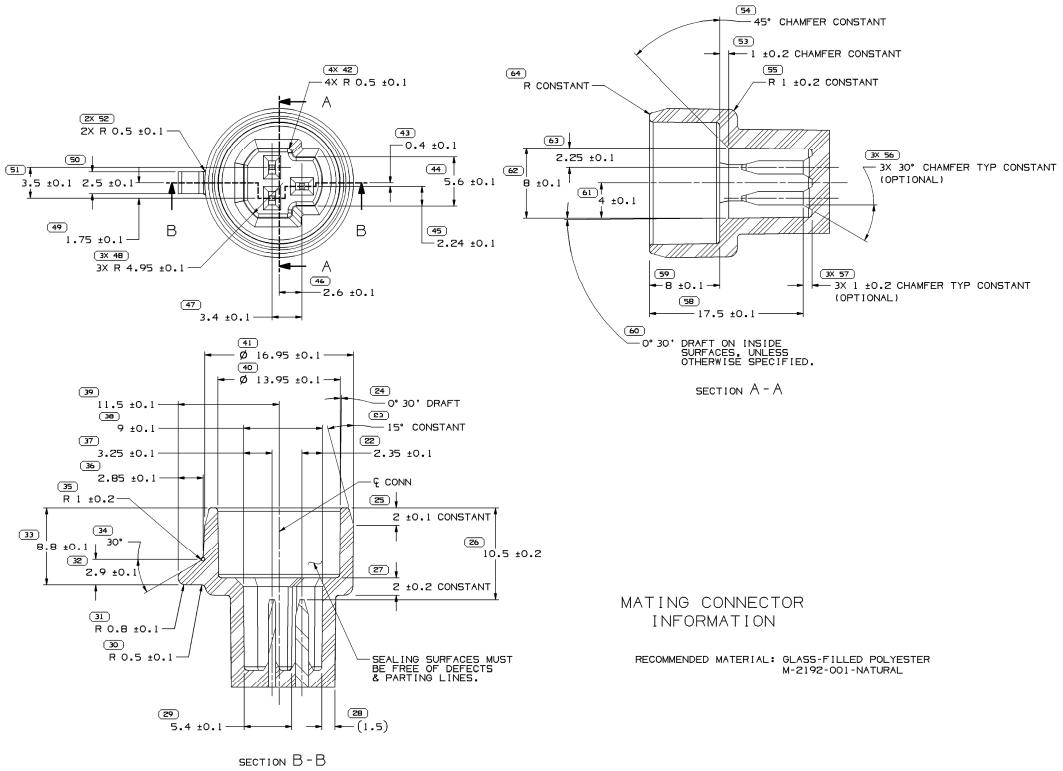

MATING CONNECTOR INFORMATION

RECOMMENDED MATERIAL: GLASS-FILLED POLYESTER
M-2192-001-NATURAL

INSPECTION SYMBOLS SHOWN IN THESE VIEWS ARE FOR REFERENCE ONLY

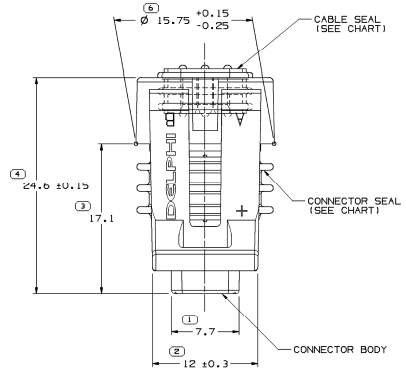

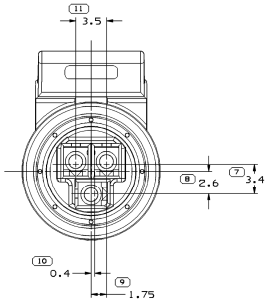

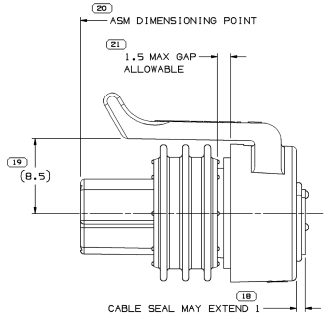

TYPE 101

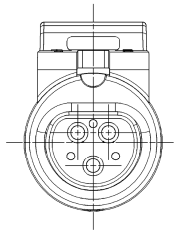

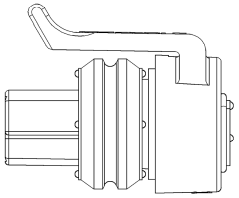

TYPE 102
SAME AS TYPE 101
EXCEPT AS SHOWN

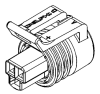

NOTES

1. UNLESS OTHERWISE SPECIFIED AND/OR INDICATED: DIMENSIONS ARE TO FACE OF VIEW SHOWN AND AUTOMATICALLY ROUNDED BY COMPUTER FOR INSPECTION (SEE MATH MODEL FOR PRECISE DIMENSIONS). FOR ALL OTHER DIMENSIONS NOT SHOWN BUT REQUIRED FOR TOOL BUILD, SEE MATH MODEL FOR PRECISE TOOL PATH DATA.
2. WHEN PARTS ARE SHIPPED THEY MUST BE PACKED IN PLASTIC BAGS OR SHIPPING CONTAINERS MUST BE LINED WITH PLASTIC LINERS. BAGS OR LINERS MUST BE SEALED TO AVOID ENTRY OF FOREIGN MATTER.
3. SEALING CODE 3 - DESIGN WILL PASS SALT FOG AND IMMERSION TEST AFTER CONDITIONING AS SPECIFIED IN ESA-644 (WEATHER-PACK), ESA-716 (METRI-PACK), ESA-650 (UNDERHOOD MICRO-PACK), C-4006 (WORLD CONNECTOR), ETC WHEN MATED TO MATING PART OR EQUIVALENT
4. THIS PART ACCEPTS THE FOLLOWING COMPONENTS OR EQUIVALENT: CAVITIES TO ACCEPT 12047680 TERMINAL.
5. FOR LEAD LENGTH CALCULATIONS, DISTANCE FROM MATING END OF CONNECTOR TO FRONT END OF CABLE CORE IS 10.15/77.05.
6. FOR PART NUMBERS WITH ADHESIVE, USE M3510001 OR ADHESIVE APPROVED BY MATERIALS ENGINEERING TO GLUE CONNECTOR SEAL TO CONNECTOR.
7. FOR APPLICATION DATA SEE THE INDIVIDUAL APPLICATION DRAWINGS.
8. S-60-T LUBEWELL LUBRICANT CAN BE USED AS AN AUXILIARY SUPPORT ON THE CABLE INSTALLATION PROCESS.

PART NO. WITH ADHESIVE	REV	N/P	PART NO. WITHOUT ADHESIVE	REV	N/P	TYPE	CONNECTOR	CONNECTOR SEAL	CABLE SEAL & COLOR
		-	15452173	01	AB	102	12065286	15439078	12065285 - RED
12186689	B3	-	12186827	A3	-	101	12065286	12186821	12110072 - TAN
		-	12162226	C3	-	101	12162225	12052893	12078089 - PURPLE
		-	12110192	B3	-	101	12065286	12052893	12110072 - TAN
		-	12078090	C3	-	101	12065286	12052893	12078089 - PURPLE
		-	12065287	B3	-	101	12065286	12052893	12065285 - RED

(N/A) PROCESS SENSITIVE DIMENSION

DIMENSIONS ENCLOSED IN ( ) INDICATE REFERENCE DIMENSION, AND NO TOLERANCE LIMITS ARE ESTABLISHED

DIMENSIONAL RANGE (MM)								SIGFIG	SET
FROM	> 0	> 20	> 30	> 70	>100	>150	>200	>250	>300
TO	20	30	70	100	150	200	250	300	400
TOLERANCE UNLESS OTHERWISE SPECIFIED									
±0.15	±0.2	±0.3	±0.4	±0.5	±0.6	±0.8	±1	±1.2	
ANGLE OR TOLERANCE ±0°									

REFERENCE

THIRD ANGLE PROJECTION

DO NOT SCALE
USE MATH DATA

NX

A DIMENSION IN THE DRAWING THROUGH A PART NUMBER INDICATES THAT PHYSICAL PARTS ARE NOT AVAILABLE FOR ORDERING.

PART NUMBERS THAT DO NOT HAVE A LINE PRESENT INDICATE THAT PHYSICAL PARTS ARE AVAILABLE FOR ORDERING.

CONTACT DELPHI SALES TO ASSURE AVAILABILITY OF PARTS.

DWG TYPE: PART DRAWING

STYLE

VOLUME (CM³)

DISTR CODE

UNLESS OTHERWISE SPECIFIED

THIS DRAWING IS IN AGREEMENT WITH ASME Y14.5M-1994 AS MODIFIED BY THE GM GLOBAL DIMENSIONING AND TOLERANCING STANDARD (GM 1995). ALL DIMENSIONS, TOLERANCES AND NOTES REQUIRED FOR INSPECTION OF THIS PART PER THIS DRAWING DOES NOT APPLY WHEN RELATIONSHIP BETWEEN FEATURES IS ESTABLISHED BY GRADUATION OR LOCATION TOLERANCES. SEPARATE POSITION CALLOUTS MAY BE BASED SEPARATELY. MOUNTING OF DATUM REFERENCE.

ALL DIMENSIONS ARE IN MILLIMETERS

DELPHI

DELPHI CORPORATION
TROY, MI 48084

COPYRIGHT 1987 DELPHI CORPORATION AND/OR ITS AFFILIATES. ALL RIGHTS RESERVED.
REVISED 30JA14
THIS DRAWING IS THE PROPERTY OF DELPHI CORPORATION OR ASSOCIATED COMPANIES AND MUST BE RETURNED ON REQUEST. REPRODUCTION AND UTILIZATION OF THIS DOCUMENT OR ITS RELATED DATA WITH DATA, AS WELL AS COMMUNICATION OF ANY CONTENT TO OTHERS, WITHOUT EXPRESS AUTHORIZATION, IS PROHIBITED.

		DATE
DR		
AP/D1	J. REEVES	21DE87
AP/D2	T. MOREY	05JA88
AP/D3	R. CANNATTI	06JA88
AP/D4		
AP/D5		

SUBSTANCES OF CONCERN AND RECYCLED CONTENT PER DELPHI 10949001

MATERIAL: SEE DRAWING

DRAWING NAME: TAXI ASM CONN F M/P 150 SLD

DRAWING NUMBER: 12078088

SIZE	SCALE	T PFMC NO	SHEET NO	STG	REV	N/P
A0	5:1	1 OF 1	1 OF 1	R	03	-