THIS DRAWING IS UNPUBLISHED | RELEASED FOR PUBLICATION 2007
© COPYRIGHT 2007 - ALL RIGHTS RESERVED

LOC	DIST
A1	-

REVISIONS

P	LTR	DESCRIPTION	DATE	DWN	APVD
	A13	Column Sealing plug and Text SINGLE WIRE SEAL added.	30JAN2009	Fru	Brun
	A14	Wrong dimensions in area B5-6 corrected to H4.6 and K=5.1	27JAN2010	Kirs.	Schus
	A15	Design 2 added.	21DEC2011	Kirs.	Schus
	A16	Designs adapted. Crimp height to PN 962843 added. Drawing corrected.	01OCT2012	Kirs.	Merz

STRIP FORM
Bandware

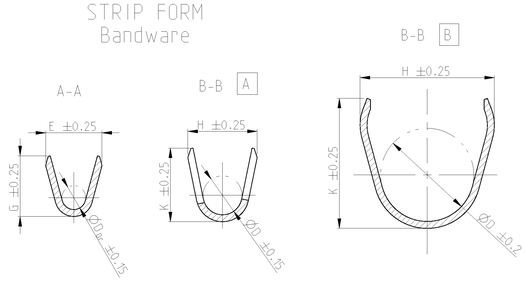

WIRE CRIMP
Drahtcrimp

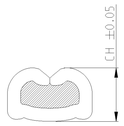

LOOSE PIECE
Einzelausfuehrung

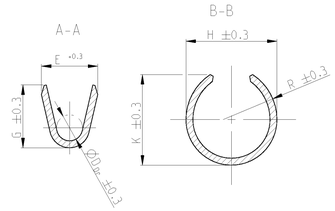

FLR-/FLK-WIRE
FLR-/FLK-Leitung

DESIGN 1
Ausfuehrung 1

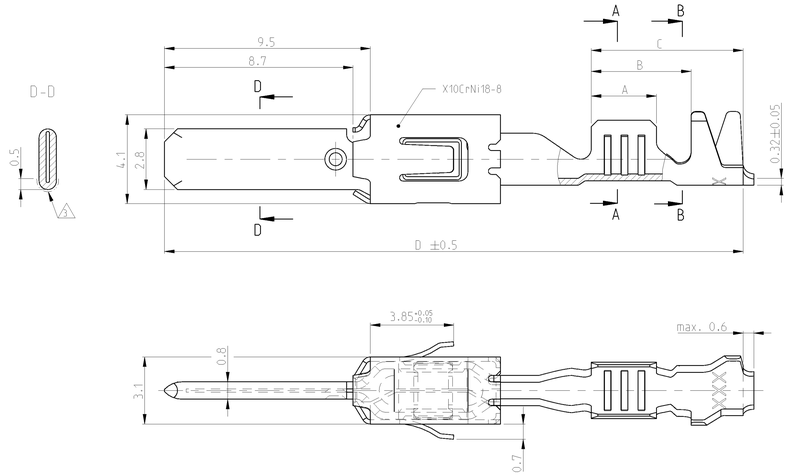

SINGLE WIRE SEAL
Einzeldichtungssystem

DESIGN 4
Ausfuehrung 4

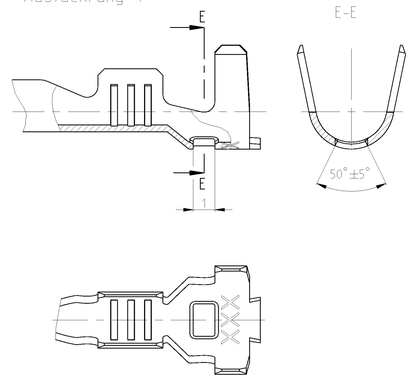

NOTES
Bemerkungen

1. CONTACT AREA PRE SILVER MIN. 3µm
   CANTILEVER SPRING PLAIN
   Kontaktzone vorversilbert min. 3µm
   Ueberfeder blank
2. CONTACT BODY Ni-PLATING MIN. 0.5µm; CONTACT AREA PRE-GOLD MIN. 0.6µm
   OVER NICKEL; CRIMP AREA PRE-TIN
   CANTILEVER SPRING PLAIN
   Kontaktkoerper vernickelt min. 0.5µm; Kontaktzone vorvergoldet min. 0.6µm ueber Nickel
   Crimpzone vorverzinnt; Ueberfeder blank
3. — · · — · · — IN THIS AREA CRACK SHAPING AT THE SURFACE PERMISSIBLE
   In diesem Bereich Rissbildung in der Oberflaeche zulaessig
4. PRE-TIN MIN. 1µm; CANTILEVER SPRING PLAIN
   vorverzinnt min. 1µm; Ueberfeder blank
5. AWG 12 TXL 828905-1 OR / oder 282536-1
   AWG 12 GXL 638865-1
6. ATTENTION! CONSTRUCTION OF THE CONTACT CAVITY IN THE AREA
   OF THE SINGLE WIRE SEAL IS Ø6.4 +0.1 -0.05
   Achtung! Die Kammer ist im Bereich der Einzeldichtung
   auf Ø6.4 +0.1 -0.05 auszulegen
7. PUNCHED WITH VOLATILIZING STAMPING-OIL
   Gestanzt mit verfluechtigendem Stanzoel

DESIGN 2
Ausfuehrung 2

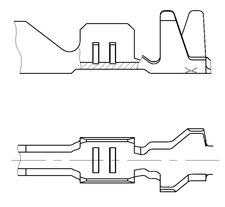

DESIGN 5
Ausfuehrung 5

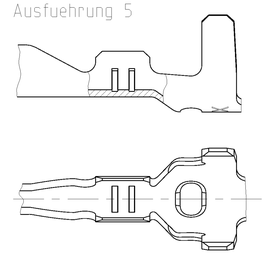

DESIGN 3
Ausfuehrung 3

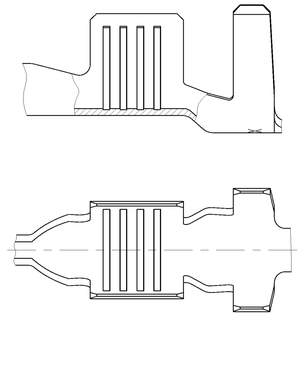

DESIGN 6
Ausfuehrung 6

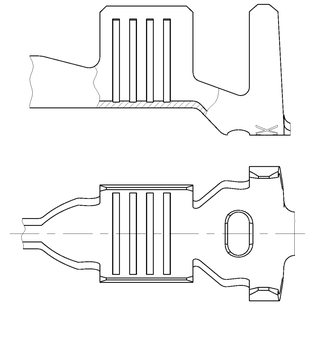

	TE ORDER-NO. STRIPFORM Bandware	REV	TE ORDER-NO LOOSE PIECE Einzelausfuehrung	DESIGN Ausfuehrung	MATERIAL Werkstoff	SURFACE Oberflaeche	DGB mm²	INSULATIONØ Isolationsø mm	STRIP FORM WIRE CRIMP Drahtcrimp	STRIP FORM INSUL. CRIMP Isolationscrimp	WIRE CRIMP HEIGTH CH Drahtcrimphoehe CH	LOOSE PIECE WIRE CRIMP Drahtcrimp	LOOSE PIECE INSUL. CRIMP Isolationscrimp	APPLICATION TOOL Anschlagwerkzeug	HAND TOOL Handzange	A	B	C	D	TE ORDER-NO. SINGLE WIRE SEAL Einzeldichtungssystem (CAVITY DIAMETER) (Kammerdurchmesser)	TE ORDER-NO. SEALING PLUG Blindstopfen
									SEE / siehe SECTION A-A Schnitt A-A	SEE / siehe SECTION B-B Schnitt B-B	SEE / siehe WIRE CRIMP Drahtcrimp	SEE / siehe SECTION A-A Schnitt A-A	SEE / siehe SECTION B-B Schnitt B-B								
SINGLE WIRE SEAL / Einzeldichtungssystem	1-1719504-2	A	1-1719503-2	4	CuSn4	1	12 AWG	max. 3.0	E = 4.0 G = 4.2 D_{Br} = 2.0	A H = 5.3 K = 5.0 D = 3.6	AWG 12 = 2.0	-	-	1852291-3	-	3.5	6.0	7.6	26.8	5	828922-1
	1-1719504-1	A	1-1719503-1	4		4															
	3-968947-1	A	3-968966-1	6	CuSn0.20	4	>2.5 - 4.0 FLR	max. 3.7	E = 4.5 G = 4.7 D_{Br} = 2.3	B H = 6.2 K = 6.0 D = 4.3	4.0 mm² = 2.25	DIMENSION SEE STRIP FORM Masse siehe Bandware		MQC APPLICATOR 2-541537-2	539635-1 MATRIZE : 539727-2	4.3	6.9	8.5	28.5	828985 (Ø6.4) 6	828986-1
	2-968947-2	A	2-968966-2	6	CuFe	1															
	2-968947-1	A	2-968966-1	6		4															
	1-968947-2	A	1-968966-2	6	CuSn4	1															
	1-968947-1	A	1-968966-1	6		4															
	2-962916-3	E	2-963749-3	4	CuFe	2	>1.0 - 2.5 FLR	max. 3.0	E = 3.6 G = 3.8 D_{Br} = 1.7	A H = 5.3 K = 5.0 D = 3.6	2.5 mm² = 1.88 2.0 mm² = 1.73 1.5 mm² = 1.58	E = 2.8 G = 3.9 D_{Br} = 1.7	H = 4.8 K = 4.5 R = 2.8	MQC APPLICATOR 2-878560-2	734440-1	3.5	6.0	7.6	26.8	828905 (Ø5.0)	828922-1
	2-962916-2	E	2-963749-2	4		1															
	2-962916-1	E	2-963749-1	4		4															
	1-962916-3	E	1-963749-3	4	CuSn4	2															
	1-962916-2	E	1-963749-2	4		1															
	1-962916-1	E	1-963749-1	4		4															
	2-962915-3	E	2-963748-3	4	CuFe	2	0.5 - 1.0 FLR	max. 2.1	E = 2.6 G = 2.9 D_{Br} = 1.2	A H = 5.0 K = 4.8 D = 3.3	1.0 mm² = 1.36 0.75 mm² = 1.27 0.5 mm² = 1.18	E = 2.2 G = 2.9 D_{Br} = 1.1	H = 4.6 K = 4.3 R = 2.3	MQC APPLICATOR 2-878559-2	734438-1	3.0	5.4	7.0	26.8	828904 (Ø5.0)	
	2-962915-2	E	2-963748-2	4		1															
	2-962915-1	E	2-963748-1	4		4															
	6-962915-6	E	-	4	CuSn4	3 3															
	1-962915-3	E	1-963748-3	4		2															
	1-962915-2	E	1-963748-2	4		1															
	1-962915-1	E	1-963748-1	4		4															
	1-965982-3	A	1-965983-3	5	CuSn4	2	0.2 - 0.5 FLR	max. 2.1	E = 2.1 G = 2.1 D_{Br} = 0.8	A H = 4.7 K = 4.5 D = 3.2	0.5 mm² = 1.12 0.35 mm² = 1.05 0.2 mm² = 0.98	E = 1.7 G = 2.15 D_{Br} = 0.8	H = 4.2 K = 4.15 R = 2.4	MQC APPLICATOR 2-878558-2	539635-1 MATRIZE : 539737-2	2.5	4.9	6.5	26.8	828904 (Ø5.0)	
	1-965982-1	A	1-965983-1	5		4															
UNSEALED / ungedichtet	3-968946-1	A	3-968965-1	3	CuSn0.20	4	>2.5 - 4.0 FLR	2.7 - 3.7	E = 4.5 G = 4.7 D_{Br} = 2.3	A H = 5.7 K = 5.9 D = 3.3	4.0 mm² = 2.25	E = 3.4 G = 4.7 D_{Br} = 2.3	H = 4.6 K = 5.1 R = 2.6	MQC APPLICATOR 2-541534-2	539635-1 MATRIZE : 539723-2	4.3	6.6	8.5	28.5		
	2-968946-2	A	2-968965-2	3	CuFe	1															
	2-968946-1	A	2-968965-1	3		4															
	1-968946-2	A	1-968965-2	3	CuSn4	1															
	1-968946-1	A	1-968965-1	3		4															
	2-962843-3	C	2-963747-3	1	CuFe	2	>1.0 - 2.5 FLK	2.4 - 3.7	E = 3.6 G = 3.8 D_{Br} = 1.7	A H = 5.5 K = 5.7 D = 3.2	2.5 mm² = 1.88 2.0 mm² = 1.73 1.5 mm² = 1.58	E = 2.8 G = 3.9 D_{Br} = 1.7	H = 4.2 K = 5.1 R = 2.4	MQC APPLICATOR 2-878552-2	734417-3	3.6	5.2	8.9	28.6		
	2-962843-2	C	2-963747-2	1		1															
	2-962843-1	C	2-963747-1	1		4															
	1-962843-3	C	1-963747-3	1	CuSn4	2															
	1-962843-2	C	1-963747-2	1		1															
	1-962843-1	C	1-963747-1	1		4															
	2-962842-3	E	-	1	CuFe	2	>1.0 - 2.5 FLR	2.1 - 2.9	E = 3.6 G = 3.8 D_{Br} = 1.7	A H = 4.3 K = 4.5 D = 2.6	2.5 mm² = 1.88 2.0 mm² = 1.73 1.5 mm² = 1.58	E = 2.8 G = 3.9 D_{Br} = 1.7	H = 3.6 K = 4.1 R = 2.1	MQC APPLICATOR 2-878551-2	734417-2	3.6	5.2	8.2	27.9		
	2-962842-2	F	-	1		1															
	2-962842-1	E	-	1		4															
	1-962842-3	E	-	1	CuSn4	2															
	1-962842-2	E	1-963746-2	1		1															
	1-962842-1	E	1-963746-1	1		4															
	2-962841-3	F	-	1	CuFe	2	0.5 - 1.0 FLR	1.4 - 2.1	E = 2.6 G = 2.8 D_{Br} = 1.1	A H = 3.2 K = 3.4 D = 1.8	1.0 mm² = 1.36 0.75 mm² = 1.27 0.5 mm² = 1.18	E = 2.2 G = 2.8 D_{Br} = 1.1	H = 2.8 K = 3.0 R = 1.6	MQC APPLICATOR 2-878550-2	734417-1	3.0	4.6	7.0	26.7		
	2-962841-2	F	-	1		1															
	2-962841-1	F	2-962841-1	1		4															
	1-962841-3	F	1-963745-3	1	CuSn4	2															
	1-962841-2	F	1-963745-2	1		1															
	1-962841-1	F	1-963745-1	1		4															
	2-963860-3	B	-	2	CuFe	2	0.2 - 0.5 FLR	1.3 - 1.6	E = 2.1 G = 2.1 D_{Br} = 0.8	A H = 2.9 K = 2.9 D = 1.4	0.5 mm² = 1.12 0.35 mm² = 1.05 0.2 mm² = 0.98	E = 1.7 G = 2.1 D_{Br} = 0.8	H = 2.5 K = 2.5 R = 1.4	MQC APPLICATOR 2-878549-2	734538-1	2.5	3.7	5.8	25.5		
	2-963860-2	B	2-963861-2	2		1															
	2-963860-1	B	2-963861-1	2		4															
	1-963860-3	B	1-963861-3	2	CuSn4	2															
	1-963860-2	B	1-963861-2	2		1															
	1-963860-1	B	1-963861-1	2		4															

CRIMP DIMENSION mm Crimpabmessungen mm		EXTRACTION TOOL Ausdrueckwerkzeug No. 968107-1	

THIS DRAWING IS A CONTROLLED DOCUMENT.

DIMENSIONS: mm

TOLERANCES UNLESS OTHERWISE SPECIFIED: 0 PLC ±0.2; 1 PLC ±; 2 PLC ±; 3 PLC ±; 4 PLC ±; ANGLES ±0.5°

MATERIAL - FINISH -

DWN 4JUN1999 M. Gerlach; CHK M. Bleicher; APVD -

PRODUCT SPEC 108-18063; APPLICATION SPEC 114-18051; WEIGHT -

TE Connectivity

NAME PRODUCT GROUP DRAWING FOR TAB 2.8x0.8
Produktgruppenzeichnung fuer
Flachstecker 2.8x0.8

SIZE A0 | CAGE CODE 00779 | DRAWING NO C-1355052 | RESTRICTED TO -

Customer Drawing | SCALE 10:1 | SHEET 1 OF 1 | REV A16