Note: All part numbers are RoHS Compliant.

Two-Piece Sealed Circular Plastic Connectors, Series 6

CPC Connectors, Series 6 Sealed – Reverse Sex

Listed part numbers are for connectors only; **contacts must be ordered separately.**

Material

Housing—Nylon, glass-filled UL rated 94V-0, black

Related Product Data

Contacts—Pages 17-21 and 47
Accessories—Page 51
Application Tooling—Pages 76-79
Technical Documents—Page 80

Replacement Coupling Ring

Shell Size	Part No.
17-10	213810-1

Square Flange Receptacle (Uses Flange Seal **Part No. 81665-2** on page 51)

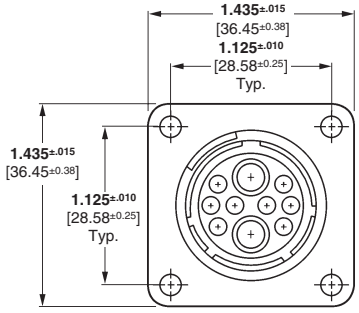

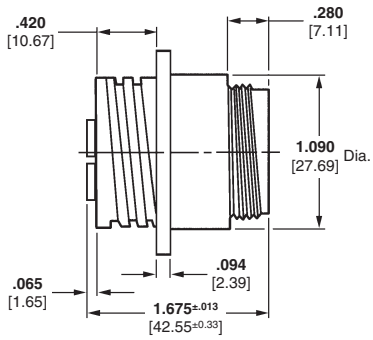

Free-Hanging Receptacle

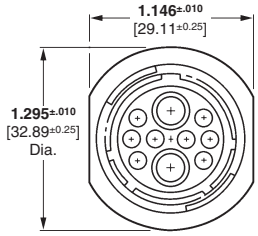

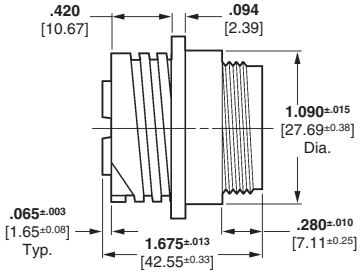

Plug

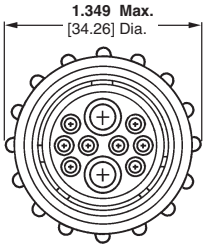

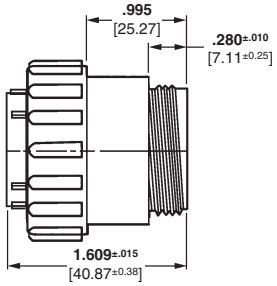

Reverse Sex (Receptacles accept socket contacts, Plugs accept pin contacts)

Arrangement	Square Flange Receptacle	Free-Hanging Receptacle	Plug
17-10 Connector	213893-2	213894-2	213906-1
17-10 Wire Entry Seal Kit	213900-1	213900-1	213900-1

Kit includes (1) Silicon Wire Entry Seal and (1) Pressure Plate.
*Wire entry seals require cable clamp kits.

Wire Entry Seal*

*Cable clamp kit 213902-3 required. (Similar to 206322-9. See page 38 for dimensional detail of cable clamp) or cable clamp kit 213904-3. (Similar to 206070-8. See page 38 for dimensional detail of cable clamp).

Rear View Receptacles

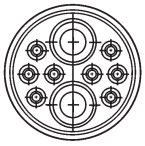

Rear View Plugs

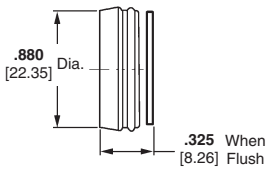

Side View Plugs/Receptacles

Note: Minimum insulation diameter is .156 [3.96]; maximum insulation diameter is .260 [6.60] for power contacts.
Minimum insulation diameter is .060 [1.50]; maximum insulation diameter is .130 [3.30] for signal contacts.

Dimensions are in inches and millimeters unless otherwise specified. Values in brackets are metric equivalents.

Dimensions are shown for reference purposes only. Specifications subject to change.

USA: 1-800-522-6752
Canada: 1-905-470-4425
Mexico: 52-55-1106-0800
C. America: 57-1-254-4444

South America: 55-11-2103-6000
Hong Kong: 852-2735-1628
Japan: 81-44-844-8013
UK: 44-208-420-8341