THIS DRAWING IS UNPUBLISHED. RELEASED FOR PUBLICATION 20
© COPYRIGHT 20 - ALL RIGHTS RESERVED.

| LOC | DIST |
|---|---|
| B | E |

REVISIONS

| P | LTR | DESCRIPTION | DATE | DWN | APVD |
|---|---|---|---|---|---|
| | B | FIRST ISSUE | 19/08/08 | MJG | - |
| | B1 | REVISED PER ECO-10-000444 | 09JAN10 | KK | AEG |
| | B2 | ECR-10-022530 | 17JUN2011 | KK | HMR |
| | | | | | |

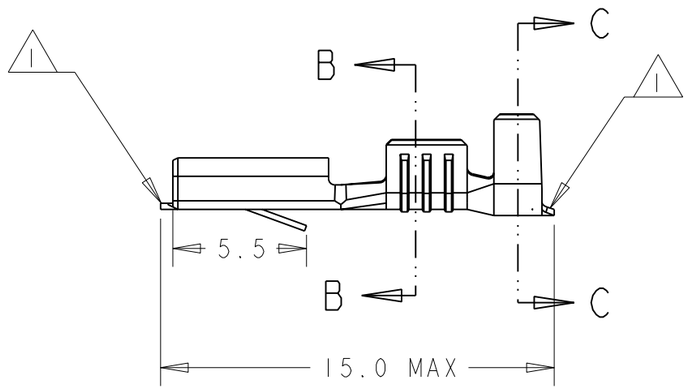


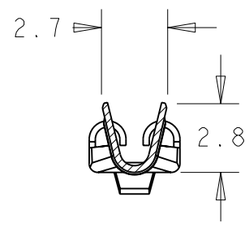


SECTION B-B

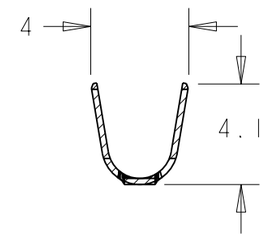


SECTION C-C

NOTES:

1. MAX CUT OFF TAB 0.5mm
2. WIRE SIZE 0.5 - 1.5mm²
3. FOR FURTHER INFORMATION REFER TO DRAWING NO 160655
4. FOR USE WITH 0.8mm TAB
5. OBSOLETE PARTS: OBSOLETE CIS STREAMLINING PER D.RENAUD/D.SINISI

| | FINISH | MATERIAL | PART NO |
|---|---|---|---|
| | TIN ELECTROPLATE | BRASS | 160668-6 |
| | SILVER ELECTROPLATE | BRASS | 160668-5 |
| OBSOLETE | PRE-TINNED (HOT DIPPED) | PHOSPHOR BRONZE | ~~160668-4~~ |
| OBSOLETE | | PHOSPHOR BRONZE | ~~160668-3~~ |
| | PRE-TINNED (HOT DIPPED) | BRASS | 160668-2 |
| 5 OBSOLETE | | BRASS | ~~160668-1~~ |

THIS DRAWING IS A CONTROLLED DOCUMENT.

DIMENSIONS: mm

TOLERANCES UNLESS OTHERWISE SPECIFIED:

| | |
|---|---|
| 0 PLC | ±0.5 |
| 1 PLC | ±0.5 |
| 2 PLC | ±0.5 |
| 3 PLC | ±0.5 |
| 4 PLC | ±0.5 |
| ANGLES | ±0.5 |

MATERIAL SEE TABLE

FINISH -

DWN M.GREENER 19AUG2008
CHK J.AMBROSE 19AUG2008
APVD J.AMBROSE 19AUG2008

PRODUCT SPEC 108-20020

APPLICATION SPEC 114-3118

WEIGHT -

TE Connectivity

NAME .110 SERIES FASTIN FASTON RECEPTACLE (LOOSE PIECE)
-

| SIZE | CAGE CODE | DRAWING NO | RESTRICTED TO |
|---|---|---|---|
| A3 | 00779 | C-160668 | - |

CUSTOMER DRAWING

SCALE 4:1 SHEET 1 OF 1 REV B2

1470-19 (3/11)

Pro/ENGINEER DRAWING