THIS DRAWING IS UNPUBLISHED. RELEASED FOR PUBLICATION -,- .
© COPYRIGHT 2011 BY TYCO ELECTRONICS CORPORATION. ALL RIGHTS RESERVED.

LOC	DIST
DW	—

REVISIONS

P	LTR	DESCRIPTION	DATE	DWN	APVD
	B	REVISED (ECO-11-013077)	23JUN'11	J.C.	W.K.

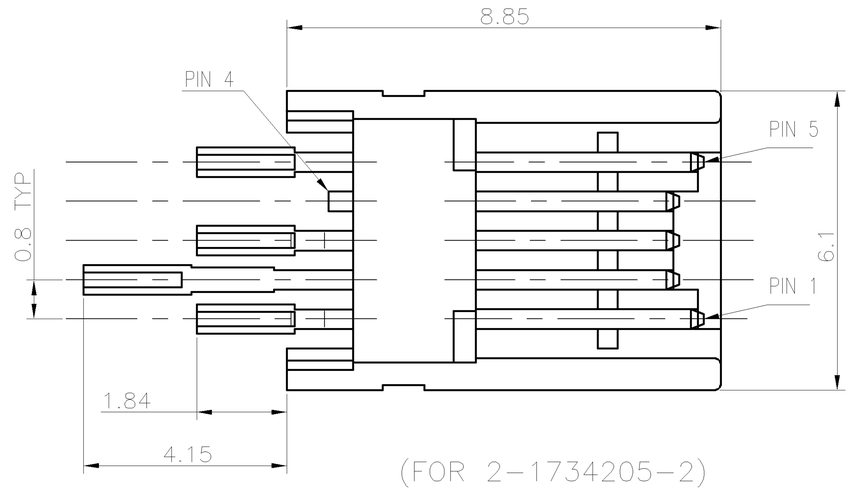

(FOR 2-1734205-2)

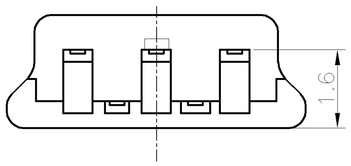

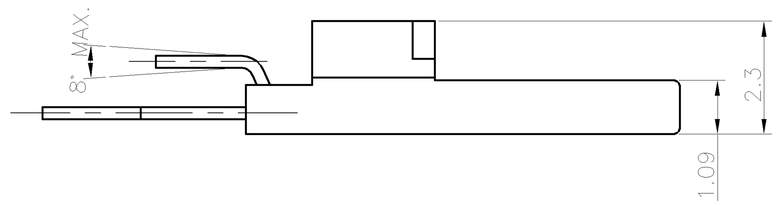

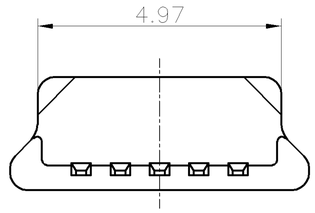

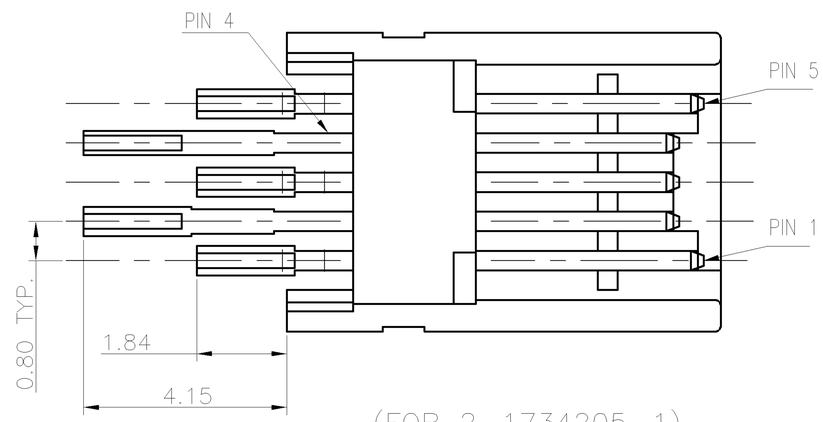

(FOR 2-1734205-1)

NOTE:

1. MATERIAL:
   HOUSING: THERMOPLASTIC UL 94V-0, COLOR: BLACK.
   CONTACTS: COPPER ALLOY, THICKNESS: 0.25mm.
2. FINISH:
   CONTACTS: GOLD FLASH OVER
   30u" MIN. PALLADIUM-NICKEL PLATED ON CONTACT AREA,
   100u" MIN. MATTE-TIN PLATED ON SOLDER TAILS,
   50u" MIN. NICKEL UNDERPLATED ALL OVER.
3. THIS IS BELONG TO NONSOLDERED PART.

4-1734205-1	3-1734205-1	W/O	2-1734205-2	1-1734205-1
		W/	2-1734205-1	1734205-1
REAR SHELL	FRONT SHELL	PIN #4	HOUSING	PART NUMBER

THIS DRAWING IS A CONTROLLED DOCUMENT.

DIMENSIONS: mm

TOLERANCES UNLESS OTHERWISE SPECIFIED:

0 PLC	± 0.38
1 PLC	± 0.25
2 PLC	± 0.20
3 PLC	± 0.05
4 PLC	± -
ANGLES	± 3°

MATERIAL: SEE NOTE

FINISH: SEE NOTE

DWN	O. HU	09MAR2006
CHK	S. HOU	09MAR2006
APVD	W.J. KE	09MAR2006

PRODUCT SPEC: 108-57062

APPLICATION SPEC: —

WEIGHT: 0.08 GRAMS

TE Connectivity

NAME: MINI USB TYPE B, PLUG, CABLE KITS

SIZE	CAGE CODE	DRAWING NO	RESTRICTED TO
A3	00779	C-1734205	—

CUSTOMER DRAWING | SCALE — | SHEET 1 OF 6 | REV B

THIS DRAWING IS UNPUBLISHED. RELEASED FOR PUBLICATION -,- .
© COPYRIGHT 2011 BY TYCO ELECTRONICS CORPORATION. ALL RIGHTS RESERVED.

LOC	DIST
DW	—

REVISIONS

P	LTR	DESCRIPTION	DATE	DWN	APVD
		SEE SHEET 1.			

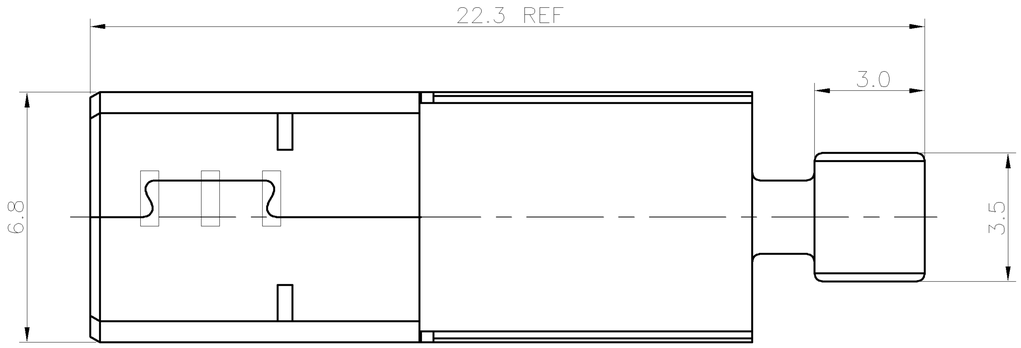

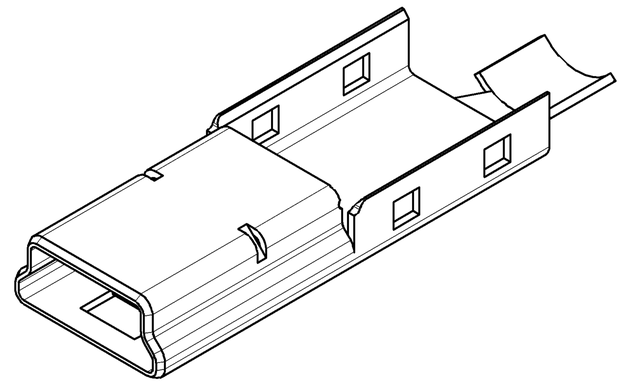

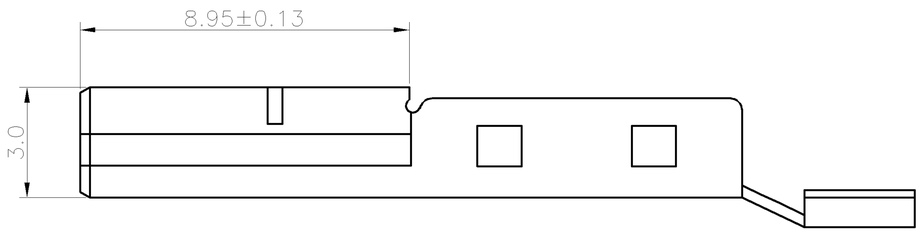

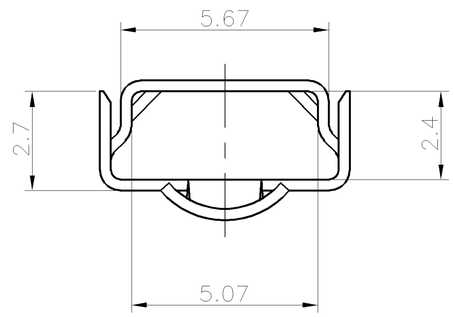

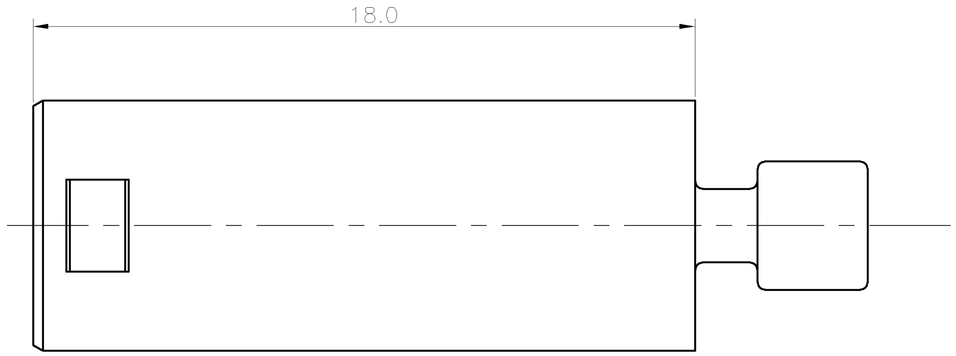

3-1734205-1
PART NUMBER

THIS DRAWING IS A CONTROLLED DOCUMENT.

DIMENSIONS: mm

TOLERANCES UNLESS OTHERWISE SPECIFIED:

0 PLC	± 0.38
1 PLC	± 0.25
2 PLC	± 0.20
3 PLC	± 0.05
4 PLC	± –
ANGLES	± 3°

MATERIAL –

FINISH –

DWN –
CHK –
APVD –
PRODUCT SPEC –
APPLICATION SPEC –
WEIGHT –

TE Connectivity

NAME
MINI USB TYPE B, PLUG, CABLE KITS

SIZE	CAGE CODE	DRAWING NO	RESTRICTED TO
A3	00779	C-1734205	—

CUSTOMER DRAWING | SCALE — | SHEET 2 OF 6 | REV B

1470-19 (1/08)

THIS DRAWING IS UNPUBLISHED. RELEASED FOR PUBLICATION -,- .
© COPYRIGHT 2011 BY TYCO ELECTRONICS CORPORATION. ALL RIGHTS RESERVED.

LOC	DIST
DW	—

REVISIONS

P	LTR	DESCRIPTION	DATE	DWN	APVD
		SEE SHEET 1.			

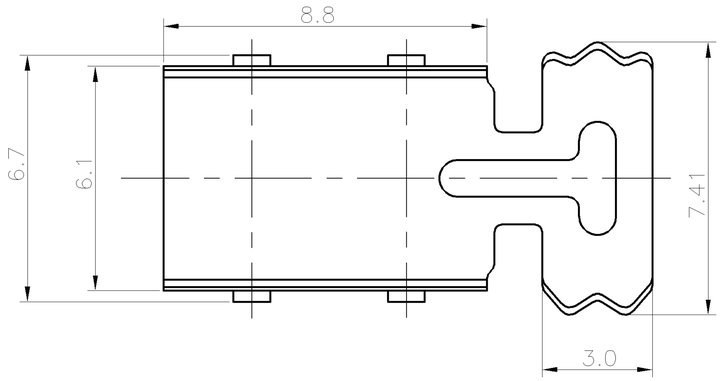

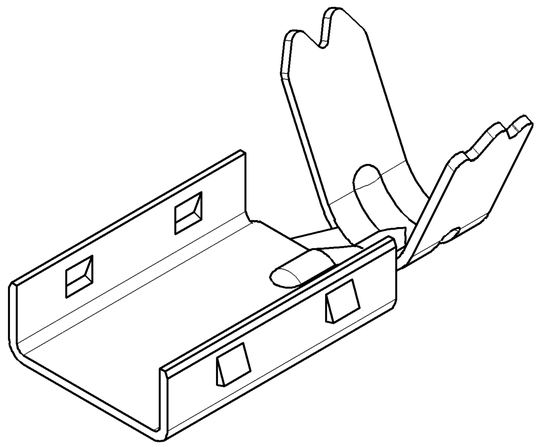

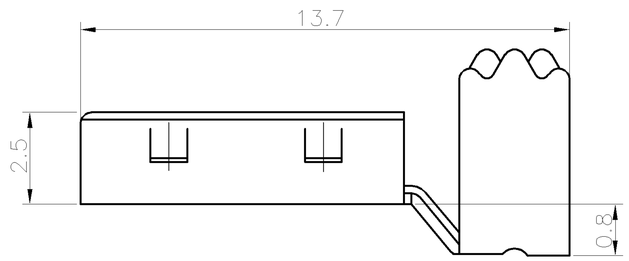

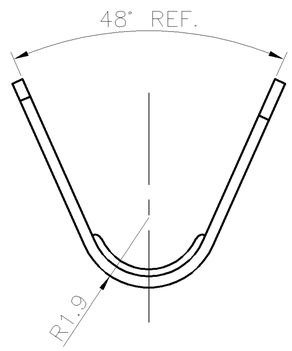

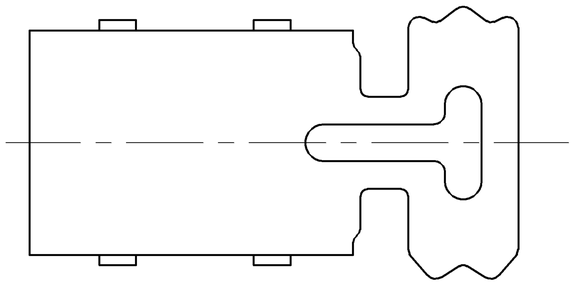

4-1734205-1
PART NUMBER

THIS DRAWING IS A CONTROLLED DOCUMENT.

DIMENSIONS: mm

TOLERANCES UNLESS OTHERWISE SPECIFIED:

0 PLC	± 0.38
1 PLC	± 0.25
2 PLC	± 0.20
3 PLC	± 0.05
4 PLC	± –
ANGLES	± 3°

MATERIAL –

FINISH –

DWN –
CHK –
APVD –
PRODUCT SPEC –
APPLICATION SPEC –
WEIGHT –

TE Connectivity

NAME

MINI USB TYPE B, PLUG, CABLE KITS

SIZE	CAGE CODE	DRAWING NO	RESTRICTED TO
A3	00779	C-1734205	—

CUSTOMER DRAWING

SCALE	SHEET	REV
—	3 OF 6	B

THIS DRAWING IS UNPUBLISHED. RELEASED FOR PUBLICATION -,- .
© COPYRIGHT 2011 BY TYCO ELECTRONICS CORPORATION. ALL RIGHTS RESERVED.

LOC	DIST
DW	—

REVISIONS

P	LTR	DESCRIPTION	DATE	DWN	APVD
		SEE SHEET 1.			

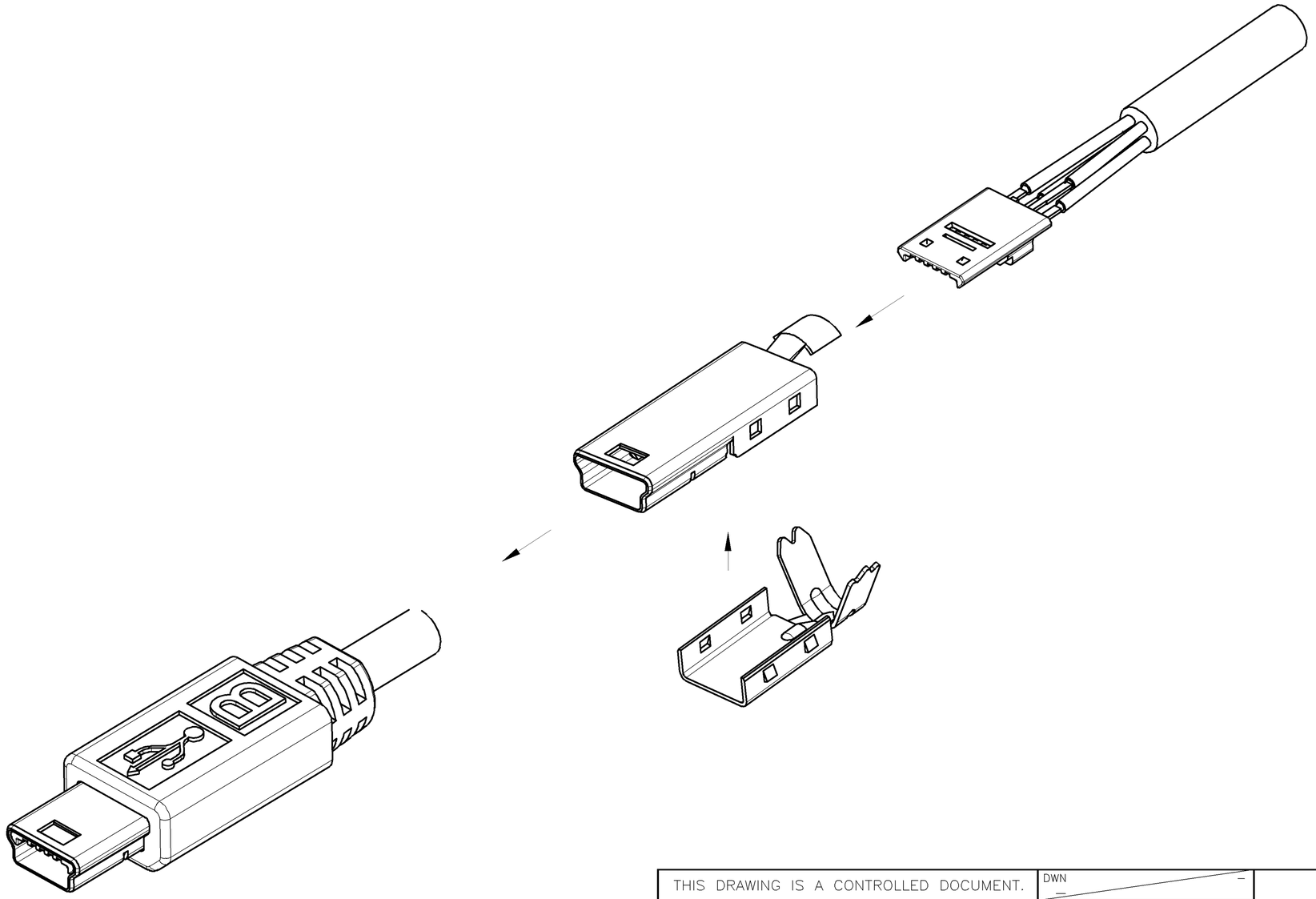

THIS DRAWING IS A CONTROLLED DOCUMENT.

DIMENSIONS: mm

TOLERANCES UNLESS OTHERWISE SPECIFIED:
0 PLC ± –
1 PLC ± –
2 PLC ± –
3 PLC ± –
4 PLC ± –
ANGLES ± –

MATERIAL –

FINISH –

DWN –
CHK –
APVD –
PRODUCT SPEC —
APPLICATION SPEC —
WEIGHT —

TE Connectivity

NAME
MINI USB TYPE B, PLUG, CABLE KITS

SIZE	CAGE CODE	DRAWING NO	RESTRICTED TO
A3	00779	C-1734205	—

CUSTOMER DRAWING | SCALE — | SHEET 4 OF 6 | REV B

THIS DRAWING IS UNPUBLISHED. RELEASED FOR PUBLICATION -,- .
© COPYRIGHT 2011 BY TYCO ELECTRONICS CORPORATION. ALL RIGHTS RESERVED.

LOC	DIST
DW	—

REVISIONS

P	LTR	DESCRIPTION	DATE	DWN	APVD
		SEE SHEET 1.			

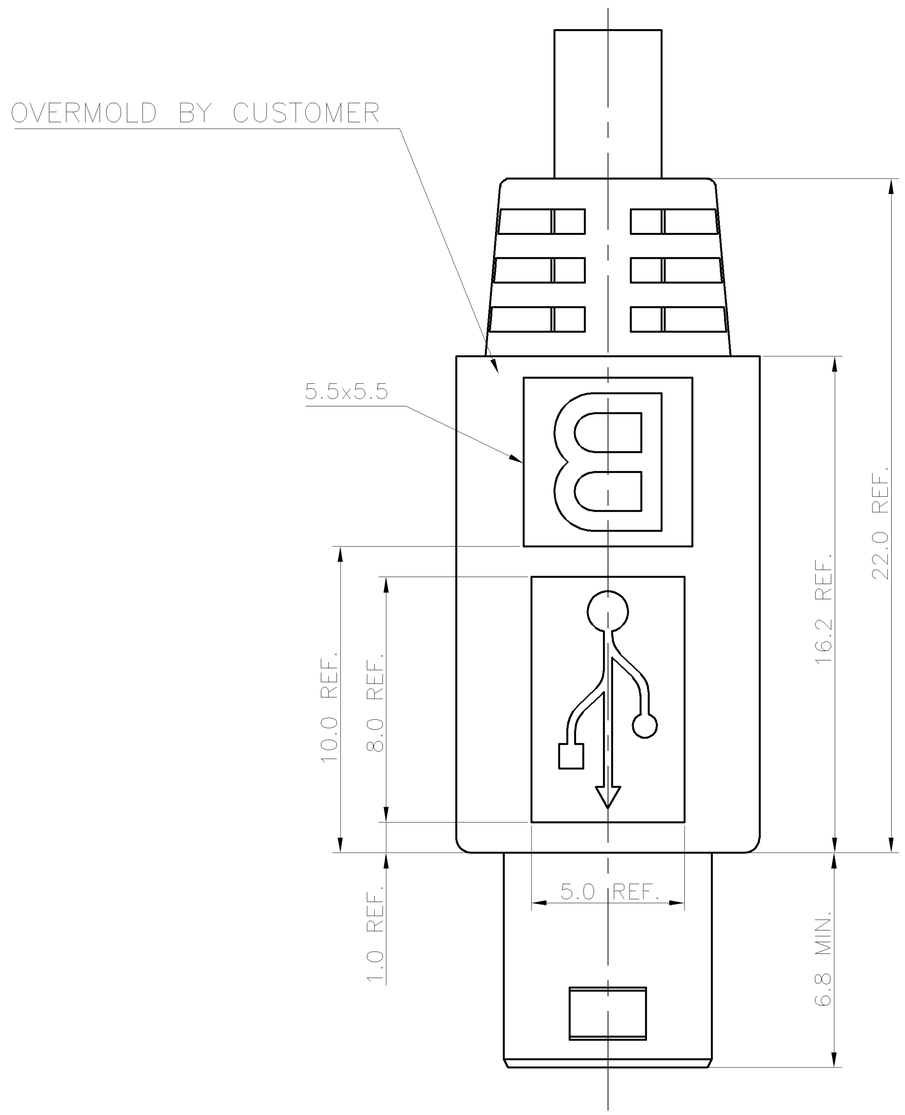

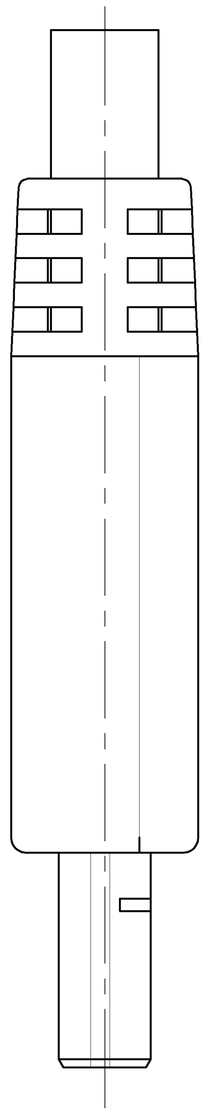

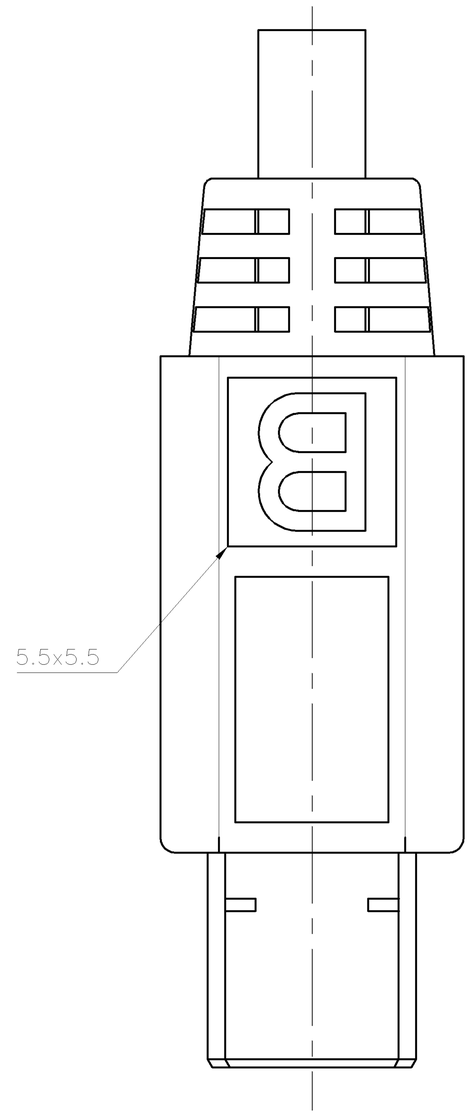

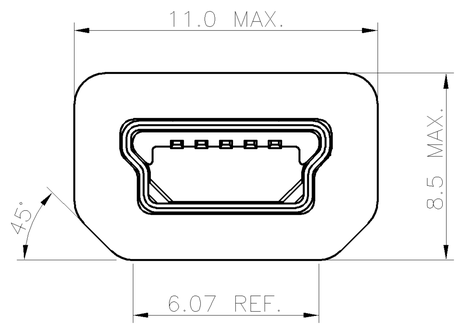

THIS DRAWING IS A CONTROLLED DOCUMENT.

DIMENSIONS: mm

TOLERANCES UNLESS OTHERWISE SPECIFIED:

0 PLC	± –
1 PLC	± –
2 PLC	± –
3 PLC	± –
4 PLC	± –
ANGLES	± –

MATERIAL –

FINISH –

DWN	–
CHK	–
APVD	–
PRODUCT SPEC	–
APPLICATION SPEC	–
WEIGHT	–

TE Connectivity

NAME

MINI USB TYPE B, PLUG, CABLE KITS

SIZE	CAGE CODE	DRAWING NO	RESTRICTED TO
A3	00779	C-1734205	–

CUSTOMER DRAWING

SCALE	SHEET	REV
–	5 OF 6	B

THIS DRAWING IS UNPUBLISHED. RELEASED FOR PUBLICATION -,- .
© COPYRIGHT 2011 BY TYCO ELECTRONICS CORPORATION. ALL RIGHTS RESERVED.

LOC	DIST
DW	—

REVISIONS

P	LTR	DESCRIPTION	DATE	DWN	APVD
		SEE SHEET 1.			

2-1734205-1 OR 2-1734205-2

PE BAG
1000PCS/PAG
10 PAGS/CARTON

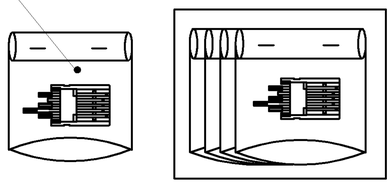

3-1734205-1

PE BAG
1000PCS/PAG
10 PAGS/CARTON

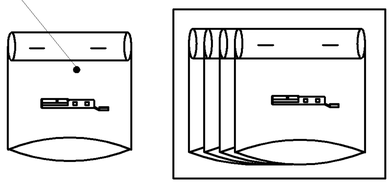

4-1734205-1

PE BAG
1000PCS/PAG
10 PAGS/CARTON

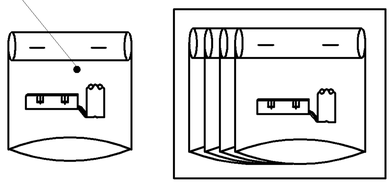

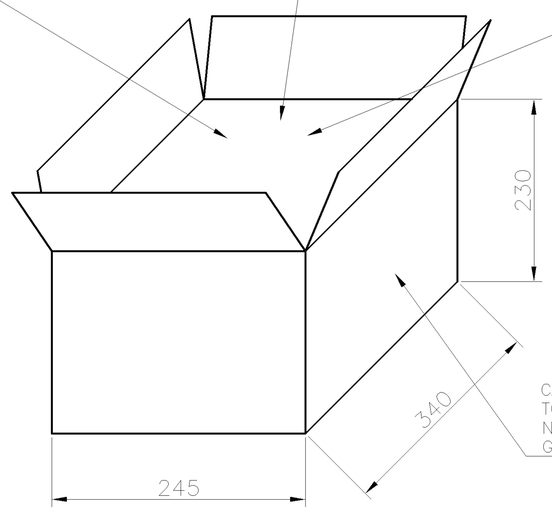

CARTON
TOTAL: 10000 SET
NET WEIGHT: 10.4 KGS
GROSS WEIGHT: 11.4 KGS

THIS DRAWING IS A CONTROLLED DOCUMENT.

DIMENSIONS: mm

TOLERANCES UNLESS OTHERWISE SPECIFIED:

0 PLC	± –
1 PLC	± –
2 PLC	± –
3 PLC	± –
4 PLC	± –
ANGLES	± –

MATERIAL –

FINISH –

DWN –
CHK –
APVD –
PRODUCT SPEC –
APPLICATION SPEC –
WEIGHT –

TE Connectivity

NAME

MINI USB TYPE B, PLUG, CABLE KITS

SIZE	CAGE CODE	DRAWING NO	RESTRICTED TO
A3	00779	C-1734205	—

CUSTOMER DRAWING

SCALE	SHEET	REV
—	6 OF 6	B

1470-19 (1/08)