THIS DRAWING IS UNPUBLISHED. RELEASED FOR PUBLICATION -.- .
© COPYRIGHT - By - ALL RIGHTS RESERVED.

LOC	DIST
J	—

REVISIONS

P	LTR	DESCRIPTION	DATE	DWN	APVD
	C2	REVISED ECR-14-006507	15MAY2014	TS	KB

RECOMMENDED PANEL DIMENSIONS

METAL PANEL

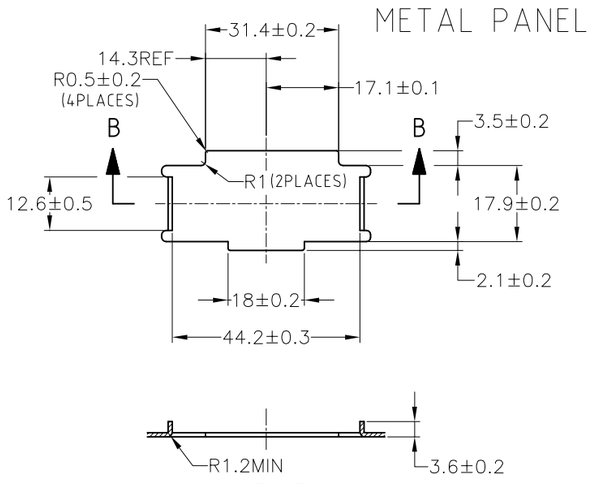

B-B

scale 1: 1

PLASTIC PANEL

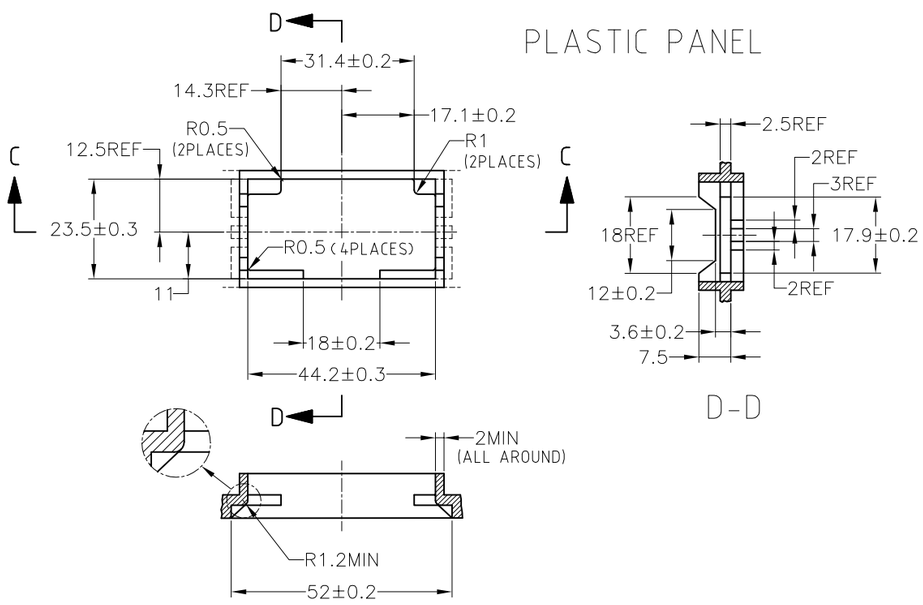

C-C

scale 1: 1

D-D

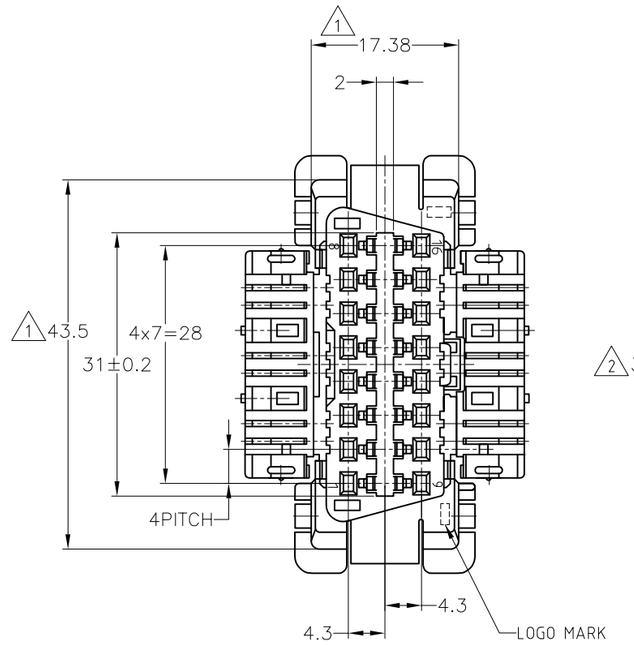

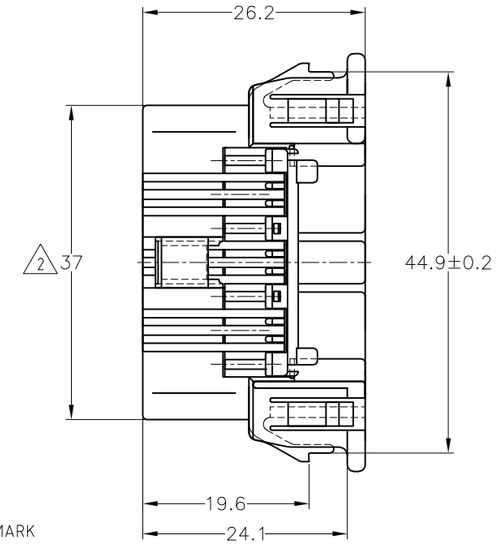

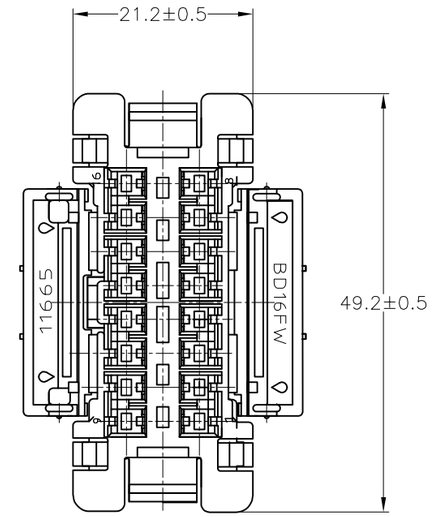

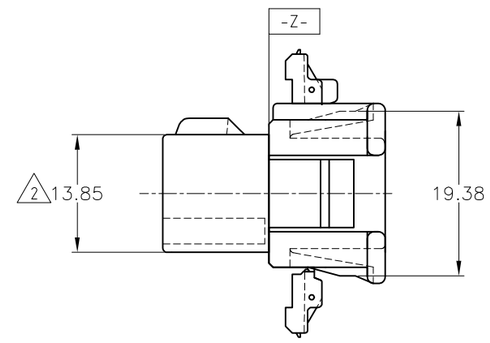

1 -Z- 面より２mmの範囲で測定
2 相手ハウジングと所定の機能を満足してかん合出来ること
3 内装するリセプタクル コンタクト型番：776001

1 TO BE MEASURED BETWEEN -Z- AND 2
2 TO BE MATE WITH CAP HOUSING SMOOTHLY
3 APPLIED RECEPTACLE CONTACT PART NUMBER:776001

色 COLOR	名称 NAME	型番 PART NUMBER
BLACK	16POSITION PLUG HOUSING	179631-2
WHITE	16POSITION PLUG HOUSING	179631-1

THIS DRAWING IS A CONTROLLED DOCUMENT.

TOLERANCES UNLESS OTHERWISE SPECIFIED:
一般公差
10以下: ±0.2
10を超え 30以下: ±0.25
30を超え 100以下: ±0.3
角度: ±3°

DIMENSIONS: mm

TOLERANCES UNLESS OTHERWISE SPECIFIED:
0 PLC ± –
1 PLC ± –
2 PLC ± –
3 PLC ± –
4 PLC ± –
ANGLES ± –

MATERIAL: PBT
FINISH: –

DWN T.Minematsu 09JUN00
CHK –
APVD M.TSUKAKOSHI 09JUN00
PRODUCT SPEC 108-5637
APPLICATION SPEC –
WEIGHT 11 g
CUSTOMER DRAWING

TE Connectivity

NAME: 16POSITION PLUG HOUSING DIAGNOSTIC CONNECTOR –

SIZE	CAGE CODE	DRAWING NO	RESTRICTED TO
A2	00779	C-179631	—

SCALE 2:1 SHEET 1 OF 1 REV C2

179631

1471-9 (3/11)